INSTRUCTIONS

for Building a

Tensegrity Table

Copyright © 2024 Robert Penoyer

A Few Remarks About Making the Tensegrity Table

Robert Penoyer
Copyright © 2024

A WARNING – PLEASE READ

Woodworking can be dangerous! It's up to you to determine if you can safely use the tools and perform the tasks needed to complete this and any other woodworking project. If you are unsure, STOP! Get advice from someone knowledgeable or do some careful studying on your own. Be safe!

Always wear at least an appropriate N95 dust mask or respirator when sanding or when spraying finishes. For advice about dust masks and respirators, visit this link:

https://woodworkingtoolkit.com/best-dust-masks-respirators/

READ, UNDERSTAND, AND FOLLOW ALL THE INSTRUCTIONS AND WARNINGS THAT CAME WITH YOUR TOOLS. BE CAREFUL!

Copyright © 2024 Robert Penoyer

Why Build This Project?

This unique and attractive little table belongs in a conspicuous place. Your family, friends, and neighbors will be amazed by its structure. It will be puzzling to most people at first, but they will be interested in its details. A lot of first reactions upon seeing it will be, "What the heck?!" It will continue to attract attention from most people even after they learn how it works.

It's a challenge to build. But you will be rewarded every time you or anyone else looks at it.

Figure 1. The Tensegrity Table

Copyright © 2024 Robert Penoyer

Key Features of the Tensegrity Table

- It has a unique design
- It's attractive and can fit into many decors
- It's modestly sized at 25 inches high and 14 inches square
- It's sturdy, weighing about 25 pounds
- You'll be glad you built it

Materials

- Wood: This project requires a truly hard wood for strength
    - 8/4 (1 13/16" finished thickness) for the 14"x14" Top and Bottom. NOTE: The Top and Bottom ***must*** be this thick (or thicker) to conceal the hardware that is used with them.
    - 6/4 (1 5/16" finished thickness) for the Trusses. NOTE: The Trusses ***must*** be this thick (or thicker) to support the stress imposed on them, particularly the Beam portion of the Trusses.
    - Species option 1, Hard Maple: Does not take stain well. Use this if you choose to use paint on the Top and Bottom and a clear finish on the Trusses. This is a less-expensive wood choice.
    - Species option 2, White Oak: Takes stain well. This is a good choice if you would like to use stain.
    - Species option 3, Red Oak: Takes stain well. This is another good choice if you would like to use stain.
- MDF
    - A small sheet of 1/4" MDF is needed to make a template for flush-cutting the Truss Legs to their final shape
- Glues
    - Titebond III: a waterproof glue for most of the gluing tasks
    - Titebond Thick & Quick: a thick, no-run glue used just for gluing the joints in the Trusses
    - All references to glue made here will be for Titebond III unless Titebond Thick & Quick is specifically called for

Copyright © 2024 Robert Penoyer

- Hardware
  - Chain
    - The chain is one of the most important components in the design. The instructions presented here will assume the use of the suggested chain. Its link size is key since the number of links used for each of the 5 chains depend on the specific link size. That size is assumed in these Instructions. <u>If you choose to use a different chain, the chain might be too weak, and the build will be more difficult because *YOU* will be required to decide on the correct number of links for each of the 5 chains. A different link size and material finish will affect the appearance of the final build.</u>

Figure 2. Purchased at Lowe's. Search for <u>Item #1329456</u>.

  - Eyebolts in stainless steel, 1/4"x2-5/8" (4 required)

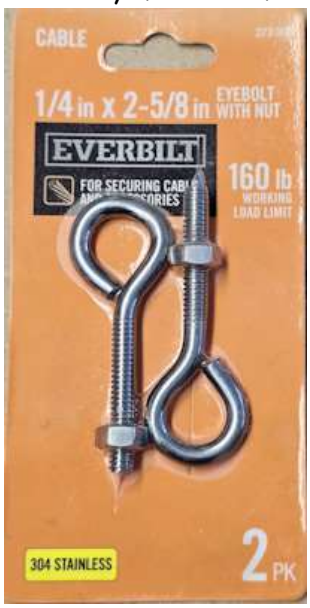

Figure 3. Purchased from Home Depot

Copyright © 2024 Robert Penoyer

- Screw Eyes in stainless steel, 1/4"x2-1/2" (6 required)

Figure 4. Purchased from Home Depot

- #8x2-1/2" or #9x2-1/2" wood screws for securing the Beams to the Legs in the Trusses (4 required)
- #8x1-1/2" wood screws for securing the Frames used in the Truss Jig (6 required)
- 1/4-20 threaded inserts for the Bottom Truss (4 required) https://www.amazon.com/dp/B002WC8TSE?ref=ppx_yo2ov_dt_b_product_details&th=1
  These knife-threaded inserts are best for use in hardwood.
- 1/4-20x1-1/2" machine screws for securing the Bottom Truss to the Bottom (4 required)
- 1/4-20 nuts for securing the Bottom Truss to the Bottom (4 required)
- 1/4" flat washers for securing the Bottom Truss to the Bottom and the eyebolts to the Bottom (8 required)
- 1/4-20x5" hex bolt with two 1/4-20 nuts for driving threaded inserts into the Bottom Truss. See Figure 5. A longer 1/4-20 bolt would be better.

Figure 5. This fabricated device will be used to insert the threaded inserts

Copyright © 2024 Robert Penoyer

- Dowels
    - Oak dowel pins, 7/16"x2-1/2" (4 required)
    - NOTE: The dowel pins should not be smooth-sided. That is, they should be scored on the sides to permit air and glue to escape as the dowels are pressed into place. Using smooth-sided dowels can make assembly extremely difficult because a smooth dowel coated with liquid glue will act like a piston being driven into a sealed cylinder so that completely inserting the dowel into its mating hole might become impossible. You can be stuck in a predicament with drying glue and a dowel not completely inserted.
- Rubber feet
    - Short rubber feet are attached to the Bottom (8 required)
    - Figure 6 illustrates one type of suitable feet. Other brands and types are certainly possible.

Figure 6. Purchased from Home Depot

Copyright © 2024 Robert Penoyer

Required Skill Level

You should have at least **intermediate** woodworking skills before attempting to build this project. This means that you should have the skills needed to perform all the tasks described here and to do so ***safely***.

Power Tools

- **Router Table**
  - Some router table work is needed, so **safe router skills are important**. You must know how to safely and properly use a flush-cutting bit. You should also know how to select the direction of a cut to minimize tear-out when using a flush-cutting bit.
- **Table Saw**
  - Safe table saw skills are important
  - A table saw crosscut sled would be very useful on this project. This is one example: https://youtu.be/KWyLrDZAW-c?si=GNf0YBSMKUoBGFaB
- **Bandsaw and/or Jigsaw**
- **Drill Press**
  - A drill press is needed to ensure that all holes are drilled perpendicular to the surfaces of the Top and Bottom
- **Impact Driver**
  - Used to drive the screws into the Trusses, to drive the screws for the rubber feet, and to drive the threaded inserts into the Bottom Truss
- **Drill Bits**
  - 3/32" for drilling pilot holes for the through-holes in the Bottom
  - 9/64" for drilling the pilot holes for the rubber feet in the Bottom
  - 13/64" with pilot-point or brad-point for drilling pilot holes for the 1/4" Screw Eyes in the Top and both Truss Beams
  - 1/4" with brad point for drilling clearance holes for the eyebolts in the Bottom
  - 5/16" for drilling clearance holes for 1/4" screws in the Bottom
  - 25/64" with brad point for drilling pilot hole for the threaded inserts in the Bottom Truss
  - 7/16" with brad point for drilling the holes for the dowel pins in the Top and the Top Truss
  - 1" Forstner bit for drilling counterbores in the Bottom

Copyright © 2024 Robert Penoyer

- **Combination Drill/Countersink**
    - For drilling pilot holes and counterbores in the Trusses. Must be suitable for #8 screws. A #8 drill-countersink bit is also suitable for #9 screws.
- **Plug-cutting Bit**
    - 3/8" to cut wood plugs to cover the screws in the Trusses
- **Flush-cutting Router Bit**
    - A bit with a bearing. The best bit will have a bearing on the top and on the bottom.

Other Tools

- **7/16" Long Socket**
    - To tighten and adjust the 1/4-20 nuts that secure the corner chains to the Bottom
- **Awl**
    - An awl or other pointed object—or even the point of a nail—is needed to impress references in the wood for centering drill bits
- **Dowel Centers**
    - Used to align holes in the Trusses with holes in the Top and Bottom
    - 3/8" and 7/16" dowel centers are needed, ideally four of each
    - NOTE: The 3/8" dowel centers will be used in 25/64" holes. That is, these dowel centers will be used in holes that are 1/64" larger than the dowel centers, which means that the fit might be loose. This can be corrected by wrapping the centers with tape as described later.
- **Flush-cutting Saw or a Chisel**
    - Wood plugs will be used to hide some screws. The portion of the plugs extending above the surface will have to be removed with a flush-cutting saw. Or they can be trimmed with a sharp chisel.
- **Bolt Cutter, Hacksaw, or Other Chain-cutting Device**
    - This tool will be used to cut the chain to the required lengths.
- **Carpenter's Level (a small "torpedo" level will be most convenient)**
    - This tool will be used to make the Top and Bottom of the Table parallel with each other.

Copyright © 2024 Robert Penoyer

Details of the SketchUp File and Equivalent PDF File

File *TT_14_SKETCHUP_VERSION_8.skp* is the SketchUp design for the Tensegrity Side Table. This file is useful since all the dimensions and other necessary details are incorporated here. But if you should find a dimension or other detail missing, it can be determined by examining this file. You can orbit and move the model around for a better look at everything.

File *TT_14SKETCHUP_VERSION_8.pdf* contains all the images and dimensions from the SketchUp file. Use this file if you're not familiar with, or don't use, SketchUp.

If you would like to view the SketchUp (.skp) file without the expense of paying for SketchUp, you can obtain the free SketchUp Viewer here:

https://www.sketchup.com/products/sketchup-viewer

Copyright © 2024 Robert Penoyer

Use the Included SketchUp or PDF File to Follow Along With the Description of Each Component

There are 12 pages in this design. The heading of each section below corresponds to the name of a particular SketchUp/PDF page.

These files are referred to collectively as **"the Design Drawing."**

Assembly

This is a view of the Table with many of the details visible. Not included in the image are the chains and the hardware that holds them.

Trusses

A Truss is shown in a see-through view. Not shown are two counterbored screw holes, one passing through the Beam into one of the Legs, the other passing through the Beam into the other Leg. These details will be illustrated and described later.

Legs and Beam

The details of each Leg and Beam are shown.

Top

The details of the Top are shown. The Top has holes only in its bottom surface. There are no holes in the top surface of the Top.

Bottom

Both the top and bottom surfaces of the Bottom are shown. The bottom surface contains 8 counterbores, each with a smaller through-hole that extends through the top surface. Eight smaller hole are located near the corners.

The top view shows the 8 holes that extend through the top surface of the Bottom.

Copyright © 2024 Robert Penoyer

Leg Template

The Leg Template is fabricated from 1/4" MDF (Medium Density Fiberboard.) MDF is easy to cut and shape, making it an ideal material for templates.

A straight piece of MDF of arbitrary width is glued along the bottom edge. All the other edges of the template and all the angles are referenced from and aligned to the top edge of this straight piece.

For example, the height of each Truss Leg is 15 1/2" so that the top edge of the template is 15 1/2" from the top edge of the straight piece at the bottom.

Similarly, the width of the bottom of each Truss Leg is 5 1/2" so that the width of the bottom of the template is also 5 1/2".

More details are provided later.

Truss Jig

It's critically important that all 3 of the pieces of each Truss are made square with each other. That is, the Legs must be square to the Beams and none of the parts should be twisted relative to the other parts. Squareness will ensure that the bottom of each Leg sits flat against the Top or Bottom.

The Jig provides support while the Beam is glued to each Leg.

Since glue squeeze-out will happen, and since you don't want the Truss to be glued to the jig, shipping tape is used in key locations to prevent any adhesion between the Truss and the jig. The details of the tape locations will be discussed later.

Copyright © 2024 Robert Penoyer

Build the Things Needed to Build the Table's Components

A few things are needed before the Table's components can be fabricated. You'll need to build the Leg Template and the Truss Jig first. The eyebolts and screw eyes will be modified at this time, also.

Fabricate the Leg Template

The Leg Template will be used for flush cutting each of the Legs using a router table.

Prepare the Leg Template

Refer to the *Leg Template* page and the *Legs and Beam* page of the Design Drawing.

Start by cutting a piece of 1/4" MDF (Medium Density Fiberboard) that's more than 6" wide and about 17" long. Be sure all the corners are square.

Cut a second piece of MDF roughly 3/4" wide and longer than 5 1/2". (The length should be shorter than the width of the first piece of MDF so that its ends won't extend past the edges of the first piece.) Its two long edges must be parallel.

Combine the Two Pieces

Glue and clamp the small piece along one of the narrow edges of the large piece such that the edges of the two pieces are flush and the ends of the small piece don't extend past the sides of the large piece. Let the glue cure for at least an hour before removing the clamps.

Trim to Size

Using a table saw, trim off one long edge of the MDF assembly so that the saw's blade will also cut one end of the small piece flush with the larger piece.

Again using a table saw, trim off the other long edge of the MDF assembly so that the final width of the MDF assembly is 5 1/2". Each end of the narrow crossmember should now be flush with a long edge of the assembly.

Copyright © 2024 Robert Penoyer

Finally, using the table saw, trim off the end of the assembly such that the distance from that end to the nearest edge of the small crossmember is 15 1/2".

The MDF assembly is now ready to be cut and trimmed to final dimensions.

Trim the Leg Template to Final Dimensions

Using the top edge of the crossmember as the starting point for all measurements, carefully mark each of the corners and edges corresponding to the dimensions of the Leg on the *Legs and Beam* page of the Design Drawing.

Use the best possible techniques to cut to the marked features. For example, use a bandsaw to remove excess material by cutting to 1/8" from the outside of the marked lines.

Now use double-sided tape to secure a straight piece of scrap flush to each marked line and flush-cut along the lines using a router table.

The MDF template should now look like the drawing on the *Leg Template* page of the Design Drawing. It should have straight, smooth edges when you're done. The corners should be clean and crisp. It's all right if the two inside corners have been rounded by the router bit.

Fabricate the Truss Jig

The Truss Jig will be used to accurately clamp and glue the pieces of the Trusses.

Make the Frames

Refer to the *Truss Jig* page of the Design Drawing. The Frames are the two stacks of 11" x 2" plywood.

Cut 4 pieces of 3/4" plywood larger than 11" x 2".

Glue and clamp two pieces together so that one edge of one piece is flush with one edge of the other piece. Glue and clamp the other two pieces, also. Keep the pieces clamped for at least one hour.

Copyright © 2024 Robert Penoyer

Remove the clamps. Place the flush edges of one of the Frames against the fence of a table saw and cut it to a width slightly greater than 2". Do the same with the other Frame.

Now set the fence of the table saw for a 2" cut. Put the newly cut edge of one of the Frames against the fence and cut the piece to width. You should now have two parallel, newly cut long edges. Repeat for the second Frame.

Finally, use the saw's miter gauge or a table crosscut saw sled to cut the ends of the Frames square so that each has a final length of 11". All four edges of each Frame should be newly cut.

Make the Base

Cut a piece of 3/4" plywood to 12 1/2" x 13 1/2". The piece should be very flat, and all the edges must be square to one another.

Apply Shipping Tape to the Base

DO NOT assemble the Frames to the Base yet. They will be attached later.

Shipping tape is applied to the Base. Shipping tape will prevent glue squeeze-out from gluing the Truss to the Jig. Look at Figure 7.

Figure 7. Lines showing the extents of tape placement

Copyright © 2024 Robert Penoyer

Before the Frames are attached, draw pencil lines as shown in the figure. That is, draw lines 4" from the right edge and 4" from the top edge of the Base. Apply a single layer (no overlap) of shipping tape covering the entire area from the right edge to the line and from the top edge to the line. (NOTE that overlapping tape will cause the Frames to sit on the Base out of square with the Base.)

Notice the rectangle in the figure. Place a single layer of shipping tape in this area so that it covers a span of at least 1/2" to 2" from the left edge of the Base. This tape is not used to protect against glue squeeze-out. Instead, it's used to keep the pieces of the Truss at the same elevation off the surface of the Base.

Attach the Frames to the Base

Place one Frame on the Base so that it's flush with the right edge and bottom edge of the Base. Carefully clamp it into place without using glue.

Turn the assembly over. Drill and countersink 3 holes for #8x1 1/2" flathead wood screws. Drive in three screws. Remove the clamps.

Place the second Frame on the Base so that it's flush with the top and left edges of the Base. Clamp it lightly into place to that its position can be adjusted as needed.

Place an accurate try square between the inside edges of the two Frames. Carefully tap the top Frame to move it until it's absolutely square to the right Frame. Tighten the clamps and recheck for squareness. Make any needed corrections and retighten the clamps.

Turn the assembly over. Drill and countersink 3 holes for #8x1 1/2" flathead wood screws. Drive in three screws. Remove the clamps.

The view of the bottom showing the screws should look like Figure 8.

Copyright © 2024 Robert Penoyer

Figure 8. Bottom of Base showing screws

Apply Shipping Tape to One Frame

One more piece of shipping tape is needed. Look at Figure 9

Figure 9. Lines showing tape placement on Frame

Copyright © 2024 Robert Penoyer

Only the Frame on the right side requires shipping tape to be applied. Carefully apply the tape so that the bottom edge of the tape just touches the bottom edge of the Frame. Leave no exposed wood. Wrap the top edge of the tape onto the top of the Frame.

Modify the Eyebolts and Screw Eyes

Now is a good time to modify the eyebolts and screw eyes. To be clear, the eyebolts have machine threads while the screw eyes have wood threads. They look the same, otherwise.

The loops on these items are closed so tightly that a chain link cannot be slipped onto the loops. So, a gap must be cut into every loop as shown in Figure 10.

Figure 10. Cutting a gap into each eyebolt and screw eye

Be sure to remove no more material than what is needed to just pass a chain link into the loop.

Burrs will have to be removed. You can use a small file to do this. A better choice would be to use a Dremel tool with a grinding bit.

Copyright © 2024 Robert Penoyer

Build the Components

The Tensegrity Table has only four components made from wood: the Top, Bottom, and two Trusses.

Prepare the Parts of the Trusses

Refer to the *Trusses* page and the *Legs and Beam* page of the Design Drawing.

The Trusses are fashioned from 6/4 material. Thinner material is not strong enough to handle the stresses that will be imposed upon them, particularly the stresses on the Beams. Further, the wood threads of the screw eyes that will be screwed into the Beams will (1) have exposed threads when using thinner material, and (2) will not have enough material in which to screw the threads to achieve maximum resistance against stripping out the wood.

Thicker material might work but would upset any sense of "lightness" that the 6/4 material offers.

Material Options

The suggested material is either hard maple, white oak, or red oak. The Table illustrated in these Instructions was made from hard maple.

Hard maple (Janka score: 1450 lb_f) is slightly harder than white oak (Janka score: 1360 lb_f,) which is slightly harder than red oak (Janka score: 1290 lb_f.)

Hard maple is also the strongest of the three woods by relatively small amounts. This characteristic is not so important for the Top or Bottom but will be important when stress is placed on the Trusses.

Hard maple is the least expensive of the three woods. On the other hand, white oak and red oak stain well. Hard maple is blotchy when stained.

Make the Beams

Cut 2 pieces of 6/4 material to a width of 1 5/16". This will give them a square cross section. Cut each piece to a length of 10".

Copyright © 2024 Robert Penoyer

Use a drill press to drill a 13/64" hole 1" deep in the center of one long edge in each piece. This is a pilot hole for the screw eye that will screw into it. A drill press is necessary to ensure that the hole is perpendicular to the surface.

Make the Legs

Make the Leg Blanks

Cut 4 pieces of 6/4 material to a width of 5 1/2" and a length of 15 **7/16**", *NOT 15* ***1/2****"!* The pieces are deliberately cut 1/16" short of the length indicated on the *Legs and Beams* page of the Design Drawing. This will eliminate the need to flush-cut along the narrow end grain of each Leg, thus avoiding a step that could be **awkward and/or dangerous**.

Mark the Hole Locations

In accordance with the *Legs and Beam* page of the Design Drawing, mark one end of each blank to indicate the centers of the two holes that will be drilled into the bottom of each Leg. The centers lie on the centerline of the bottom of each Leg. The Design Drawing provides the other dimensions.

Firmly press an awl into the centers that you have just marked. This will provide a small dent to help center the brad-point drill bits later.

Trace the Leg Outline on Each Blank

Using the Leg Template that you built, and which is described on Page 13, place the top of the crossbar of the template firmly against the bottom of each blank. Be sure the outside edges of the template are flush with the outside edges of the blank, and then trace the outline of the template onto the blank.

Group and Clamp the Leg Blanks Together

Group and clamp the Leg Blanks together as shown in Figure 11.

Copyright © 2024 Robert Penoyer

Figure 11. Group all the Leg Blanks together

Be sure that all sides of all the blanks are flush. In particular, let the "top" end of each blank rest solidly on a flat surface, as shown in the figure, before tightening the clamps.

Grouping and clamping the Leg Blanks this way will provide a stable platform for drilling and ensure that the holes for the dowels and threaded inserts are drilled perpendicularly into the bottom. This will help to ensure that the dowels and threaded inserts will align correctly when the Trusses are mated to the Top and Bottom.

Drill into the Bottoms of the Leg Blanks

Carefully and clearly mark the hole diameters next to the location where each hole will be drilled. Two of the Legs will have 7/16" holes (for the dowels.) Two will have 25/64" holes (for the threaded inserts.) Mark the diameters clearly as these diameters will be referred to later.

Copyright © 2024 Robert Penoyer

Take the clamped block of Leg Blanks to a drill press.

Insert a brad-point bit with one of the specified bit sizes into the chuck of the drill press and drill only those holes intended for that drill size. Do not get the sizes mixed up. Per the *Legs and Beam* page of the Design Drawing, the holes must be drilled to a depth of 1 3/16".

Swap drill bits and drill the other set of holes. Again, do not get the sizes mixed up. Drill these holes 1 3/16" deep also.

Remove the clamps.

Rough Cut the Blanks

Use a bandsaw to cut within about 1/8" of the lines that you marked on Page 20. Do this for each Leg Blank.

Flush-cut the Blanks

Used double-sided tape to attach the Leg Template to one of the Leg Blanks. Be sure that the crossmember is pressed firmly against the bottom of the Blank and the sides of the Template are flush with the sides of the Blank. Press the Template firmly against the Blank so that the tape is fully engaged.

You should not have to flush-cut the end grain of the top end—which can be tricky and dangerous. That is, you should have cut the Blanks 1/16" short on Page 20.

Use a router table with a flush-cutting bit with a bearing to trim the sides of the Leg flush with the sides of the Template. Cutting in the wrong direction with respect to the wood grain will cause unnecessary tear-out.

Be aware of the direction of cut as you climb up the sides of the triangular section of the Leg. Select a bit with the bearing on the top or bottom as needed, and the template on the top or bottom as needed, so that the blades of the bit don't cut against the grain of the wood in the Leg.

Repeat the flush cutting for all the Leg Blanks.

Copyright © 2024 Robert Penoyer

Sanding and Removing Any Burning

The following describes an organized way to sand the Legs. Some burning could have occurred depending on your choice of material, the sharpness of the flush-cutting bit, the bit speed, and the speed with which you fed the material past the bit.

As you did when you grouped the Leg Blanks together (see Figure 11) group the Legs together as shown in Figure 12.

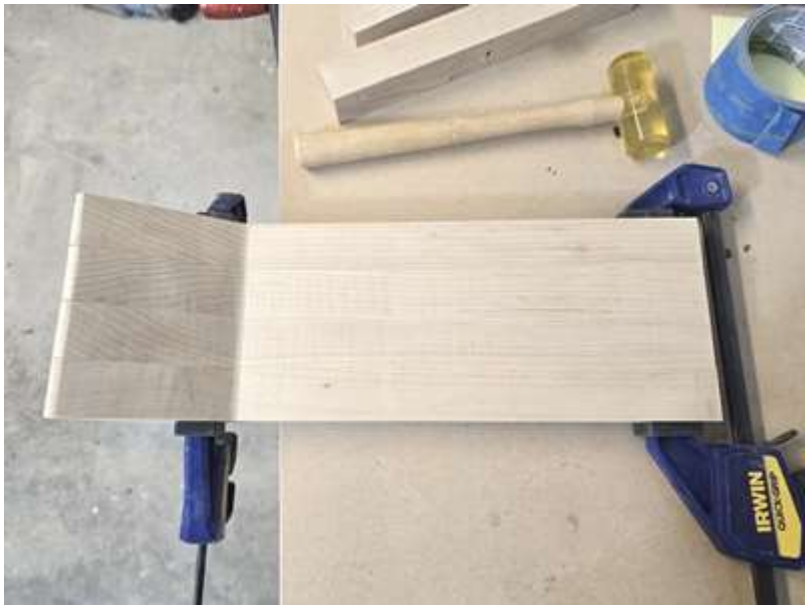

Figure 12. Group and clamp the Legs for sanding

The clamping arrangement in the figure provides a great opportunity to sand all the Legs simultaneously using a power sander such as a random-orbit sander or a quarter-sheet sander. DO NOT attempt to use a belt sander as it's too aggressive.

The power sanders will provide the best way to sand away any burn marks. And you can be fairly aggressive with them if the burning is stubborn to remove.

Remove the clamps when you're finished.

Keep Track of Each Hole Size

Keep the two Legs with 25/64" holes together.

Copyright © 2024 Robert Penoyer

Keep the two legs with the 7/16" holes together. Do not mix up the two types of Legs.

Put one pair of Legs aside. Use the other pair to build a Truss by following the instructions below.

Assemble one Truss

Be sure that the two Legs that you are about to work with have the same hole size.

Begin the assembly by gluing one Beam and one Leg together using the Truss Jig.

Applying Blue Tape to the Beam and Leg

Just as the Truss Jig was built with shipping tape to protect it against glue squeeze-out, blue tape will be used to protect the individual Truss parts from glue squeeze-out, thus making glue cleanup much easier.

Figure 13 shoes how blue tape must be applied to the Beam and Leg before gluing. See Table 1 for descriptions of the different parts of Figure 13.

Copyright © 2024 Robert Penoyer

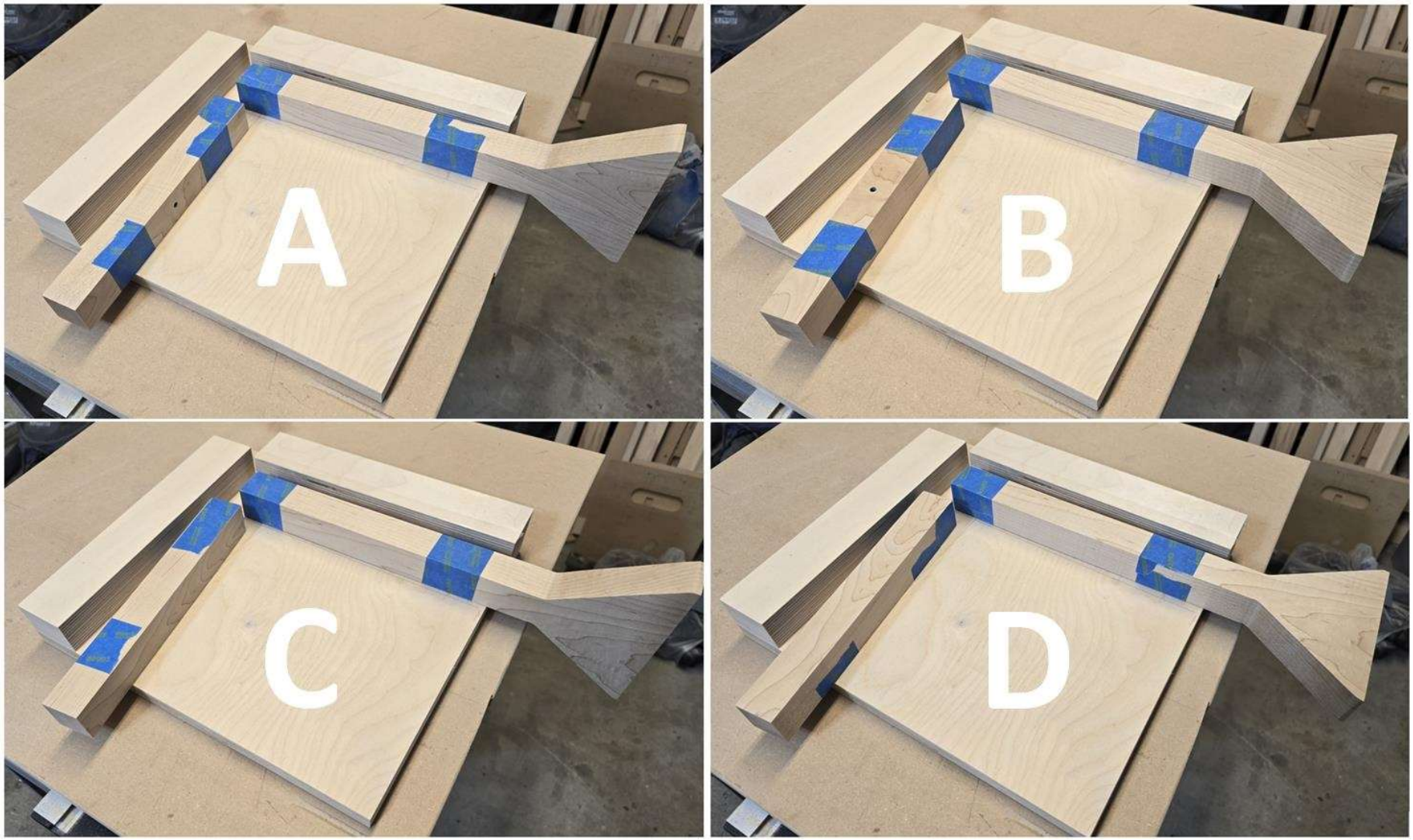

Figure 13. Taping a Beam and Leg for glue-up (See Table 1)

Copyright © 2024 Robert Penoyer

Table 1. Taping a Beam and Leg for glue-up (See Figure 13)

IMAGE	DESCRIPTION
A	Note the position of the hole in the Beam. Everything is ready. Just apply glue onto the exposed area of the Beam and the top of the Leg and then slide the pieces into position against the Frames of the Jig. ***NOTE: It cannot be seen in Figure 13, but it's important that the tape at the far end of the Beam wraps around to cover the end of the Beam.*** This will prevent glue squeeze-out from getting onto the end of the Beam.
B	Note the position of the hole in the Beam. The Beam is rotated one position counterclockwise from Image A. The Let is rotated one position clockwise from Image A.
C	The hole in the Beam is now facing the top Frame of the Jig. The Beam is rotated one position counterclockwise from Image B. The Let is rotated one position clockwise from Image B.
D	The hole in the Beam is now facing downward toward the Base of the Jig. The Beam is rotated one position counterclockwise from Image C. The Let is rotated one position clockwise from Image C.

Figure 13 and Table 1 illustrate and explain how the tape should be arranged on each side of the Beam and Leg. One purpose of the tape is to help prevent glue squeeze-out from getting onto unwanted areas of the Beam and Leg.

The other purpose of the tape is to balance the tape thickness to maintain squareness as the glue cures. So, if tape is needed on one end to prevent glue squeeze out from spreading onto the wood, tape is also needed on the other end so that each part is not tilted against the Frame or the Base due to unequal layers of tape.

Glue and Clamp

It would be helpful to use Titebond Quick & Thick glue here since the glue will be spread onto vertical surfaces and it will be less likely to drip. Also, it's helpful that the Quick & Thick glue cures clear.

Copyright © 2024 Robert Penoyer

Arrange a Beam and Leg as shown in Figure 14. Be sure that the hole in the Beam is visible as it is in the figure. Also, ensure that the far end of the Beam in this figure is pressed firmly against the Frame that's toward the top of the picture

Figure 14. Beam and 1 Leg in Clamps

Notice the long clamp. It's needed to close the joint since the thickness of the glue might tend to keep the Beam and Leg spread apart.

Remove the Partial Truss Assembly from the Clamps

Wait 20-30 minutes for the glue to cure before removing the clamps. Because this is the absolute minimum clamping time, be sure to handle the partial assembly very delicately.

Carefully remove all the tape. Carefully clean up any glue squeeze-out.

Predrill for a Screw

Not shown in the Design Drawing is a screw that will be used to secure each end of the Beam with a Leg. Look at Figure 15.

Copyright © 2024 Robert Penoyer

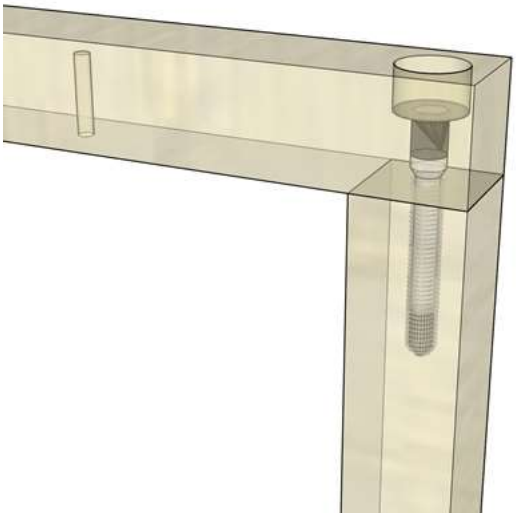

Figure 15. Drill and counterbore a hole for a 2 1/2" flathead screw

You must drill a pilot hole through the Beam and into the center of the Leg to permit the use of a #8 or #9 flathead screw that's 2 1/2" long. Further, the hole should be counterbored so that the top of the screw is located at least 1/2" below the surface of the beam. The counterbore permits the use of a wood plug to cover the hole and hide both the screw and the hole.

> **FAILURE TO USE A SCREW HERE WILL SIGNIFICANTLY WEAKEN THE STRUCTURE OF THE TABLE.**
>
> **FAILURE TO DRILL A PILOT HOLE BEFORE DRIVING IN THE SCREW SIGNIFICANTLY RISKS SPLITTING THE LEG.**

The wood plug will be inserted later.

Attach the Second Leg to the Beam

Repeat the procedure used above to attach the second Leg to the Beam. Be sure to correctly apply the blue tape.

Figure 16 shows the clamping arrangement with two Legs clamped into the Truss Jig.

Copyright © 2024 Robert Penoyer

Figure 16. Beam and 2 Legs in Clamps

Remove the Truss from the Clamps

Wait 20-30 minutes for the glue to cure before removing the clamps. Because this is the absolute minimum clamping time, be sure to handle the partial assembly very delicately.

Carefully remove all the tape. Carefully clean up any glue squeeze-out.

Predrill for a Screw

Follow the procedure outlined above and use Figure 15 as a reference to install a counterbored and pilot-drilled screw into the second leg

Insert Plugs into the Counterbores

Make or buy plugs to insert into the counterbores to hide the screws and hide the holes.

For information about making and using wood plugs, watch this video: https://youtu.be/v9m73_H8TCc?si=ZS-O-8n16tcw78gv.

Copyright © 2024 Robert Penoyer

Trim and Sand the Plugs

Once the plugs are glued and inserted, trim off the excess from the Plugs using a flush-cutting saw or a sharp chisel.

Sanding of the plugs will probably be necessary to make them blend in with the surrounding wood.

Assemble the Second Truss

Return to Page 24 and follow the instructions beginning with "Assemble one Truss".

Build the Top and Bottom

As shown in the Design Drawing, the Top and Bottom are fashioned from 8/4 material. This thickness is necessary to hold and conceal the hardware used in the Table. Therefore, do not attempt to substitute thinner material.

Create a Glue-up

The Top and Bottom measure 14" square. You are not likely to find an 8/4 board that's 14" wide or wider. Therefore, you will have to make a glue-up of two or more boards.

Select your material. Use a table saw to joint the edge of your boards. That is, the sawn edges should be both smooth and straight after cutting. A new blade can help ensure that the cut will be smooth. A truly straight cut will ensure that there will be no gaps when the edges of two or more pieces are glued together.

The total width and length of the glue-up must be larger than 14". The Top and Bottom illustrated in these Instructions were each glued up from two boards, each more than 7" wide.

It's recommended that you use biscuits, dowels, or dominoes to join the boards together to ensure that the surfaces of the boards are as well aligned as well as possible.

Copyright © 2024 Robert Penoyer

Applying Glue

Be sure to thoroughly cover each mating edge with glue. That is, apply glue to the entire surfaces of all mating edges.

Clamp the pieces and let the glue cure overnight before removing the clamps.

It's important to remove any glue squeeze-out, particularly if you plan to stain the pieces.

Sand

Once the glue has cured overnight and the clamps have been removed, sand the flat surfaces of both assemblies to carefully blend each part with the adjacent part so that the joint is as concealed as possible.

Cut to Finished Size

Refer to the *Top* and *Bottom* pages of the Design Drawing.

Cut each piece to 14" by 14" while ensuring that all the edges are square to one another.

Identify and Label the Top and Bottom

Examine the two pieces just created. Choose the nicest one to be the Top and the other one to be the Bottom. Mark them to avoid confusing them.

Drill the Top

Examine the piece chosen to be the Top. Choose the nicest surface to be the top of the Top. Mark the two surfaces to avoid confusing them.

Refer to the *Top* page of the Design Drawing. Only the bottom surface of the Top is to be drilled.

Mark the hole locations at each corner using an awl to help guide the drill bit. Use a drill press with a 13/64" pilot-point or brad-point bit to drill a 1 1/4" deep hole at each corner as indicated on the *Top* page. These are pilot holes for screw eyes. The use of a drill press will ensure that the holes are drilled perpendicular to the surface.

Copyright © 2024 Robert Penoyer

Locate the Truss with the 7/16" Holes

The Truss with the 7/16" holes will be attached to the Top using 7/16" dowels. Be sure to locate this Truss. Put the other Truss aside.

The Truss with the 7/16" holes will be referred to from here on as the Top Truss and the Truss with the 25/64" holes as the Bottom Truss.

Determine the Positions of the Dowel Holes in the Top

Place the Top on a flat surface with its bottom facing up. Be sure to clean the surface first. Then place something soft between the Top and the surface, such as paper towels, so that any debris will not mar the Top.

Place the Top Truss onto the Top so that it's located in its final position. Clamp it in place.

Use Tape to Mark the Edges of the Top Truss

Place pieces of blue tape on the Top such that the edges of the tape are flush with the edges of the Top Truss. Figure 17 shows what you should be left with after removing the Top Truss.

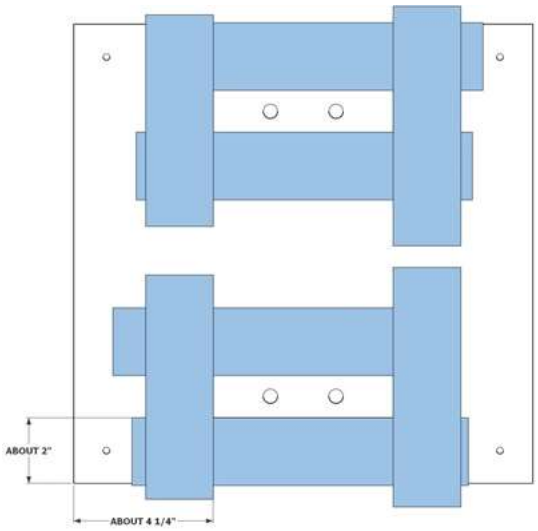

Figure 17. Blue tape marks the edges of the Top Truss

The dimensions in the figure are approximate. You should have positioned the Top Truss so that it looks evenly spaced from all edges of the Top.

Copyright © 2024 Robert Penoyer

Use Dowel Centers to Mark the Hole Positions

If you are not familiar with the use of dowel centers, refer to https://youtu.be/Jhjc9ZSPB0U?si=b8g_NpnMochph7J0

Examples of the dowel centers used with this project are shown in Figure 18.

Figure 18. 3/8" and 7/16" dowel centers

You will need four 7/16" dowel centers for the Top Truss.

1. Place the dowel centers in the holes of the Top Truss
2. Put the Top Truss on the Top
3. Carefully center the bottom edges of the Legs along the edges of the tape in the areas that mark the outlines of the Legs
4. Once you are confident that the Top Truss is positioned correctly, and without moving the Truss, press down on the Truss or tap it down with a mallet or hammer.
5. Mark one Leg of the Top Truss with an "A" and the other Leg with a "B"
6. Move the Truss aside slightly and mark the area of each Leg location on the Top with a corresponding "A" or "B"

Copyright © 2024 Robert Penoyer

Put the Top Truss aside to reveal indentations at the exact locations of the holes in the Truss. Because the locations of the holes in the Top Truss might not be identical in each Leg, the "A" and "B" markings will ensure that the Truss is returned to its exact location when the time comes for doweling and gluing.

Use an awl to enhance the indentations in the Top if they aren't very deep.

Drill the Dowel Holes into the Top

With the centers of the dowel holes clearly marked, use a drill press with a 7/16" brad-point bit to drill a hole 1 3/16" deep at each marked location.

The Top is now ready for sanding and a finish.

Drill the Bottom

Examine the piece chosen to be the Bottom. Choose the nicest surface to be the top of the Bottom. Mark the two surfaces to avoid confusing them.

Refer to the *Bottom* page of the Design Drawing.

Mark the Holes of the Bottom Truss into the Bottom

Unlike the Top Truss, the Bottom Truss will not use dowels. Instead, it will use threaded inserts. Thus, the hole sizes in the Bottom Truss are different than the sizes of the corresponding holes in the Bottom.

Place the Bottom on a flat surface with its top (not its bottom) facing up. Be sure to clean the surface first. Then place something soft between the Bottom and the surface, such as paper towels, so that any debris will not mar the Bottom.

Place the Bottom Truss onto the Bottom. Position the Truss on the Bottom just as you did with the Top. Clamp it in place. Mark the outer edges of the Bottom Truss position using tape as shown Figure 17.

Copyright © 2024 Robert Penoyer

You will need four 3/8" dowel centers for the Bottom Truss.

> **NOTE: The holes in the Bottom Truss are 25/64" so that 3/8" dowel centers might fit the holes loosely. If they do, wrap a piece of tape around each dowel center before inserting it into a hole.**

1. Place the dowel centers in the holes of the Bottom Truss
2. Place the Bottom Truss on the Bottom
3. Carefully center the bottoms of the Legs along the edges of the tape in the areas that mark the outlines of the Legs
4. Once you are confident that the Bottom Truss is positioned correctly, and without moving the Truss, press down on the Truss or tap it down with a mallet or hammer.
5. Mark one Leg of the Bottom Truss with a "C" and the other Leg with a "D"
6. Move the Truss aside slightly and mark the area of each Leg location on the Bottom with a corresponding "C" or "D"

Use an awl to enhance the indentations in the Bottom if they aren't very deep.

<u>Mark the Other Holes</u>

Refer to the *Bottom* page of the Design Drawing. Refer to the *Bottom (Top View)* image and use an awl to mark the locations of the 4 corner holes.

<u>Drill with a 3/32" Bit</u>

You should have marked 8 holes on the top of the Bottom with an awl. All these will be drilled using a 3/32" bit. This bit size was chosen over a 1/16" bit because a 1/16" bit might not be long enough to drill all the way through an 8/4 board.

1. Use a drill press with a 3/32" bit to drill a hole at each of the 8 positions
2. <u>Drill very slowly</u> so that the grain of the wood doesn't deflect this narrow bit
3. Drill all the way through the Bottom

Copyright © 2024 Robert Penoyer

Drill Counterbores into the Bottom

Turn the Bottom over so that its bottom is facing up.

Refer to the *Bottom* page of the Design Drawing and look at the *Bottom (Bottom View)* image. Use a drill press with a 1" Forstner bit to drill into each pilot hole to a depth of 1 3/16" as indicated in the drawing.

Finish Drilling at the Corner Counterbores

Place some scrap under the Bottom to reduce tear-out when drilling.

Use a drill press with 1/4" bit to drill a through-hole at the center of each of the counterbores located at the corners only.

Finish Drilling at the Truss Counterbores

Use a drill press with a 5/16" bit to drill a through hole at the center of each of the remaining counterbores, that is the counterbores associated with the Bottom Truss. The 5/16" holes will provide some "wiggle room" when the Bottom Truss is attached.

Drill Pilot Holes for the Feet

Refer again to the *Bottom* page of the Design Drawing and look at the *Bottom (Bottom View)* image. Use an awl to mark the centers of the eight 9/64" holes.

Use a drill press with a 9/64" bit to drill the 8 holes 1 3/16" deep near the corners.

The Bottom is now ready for sanding and a finish.

Assemble the Device Shown in Figure 5

The purpose of this device is to drive threaded inserts into the holes of the Bottom Truss. It's easy to drive threaded inserts so that they aren't square to the surface. The length of the bolt helps to visually ensure that the threaded inserts will be driven in perpendicular to the surface. A longer bolt, maybe a longer piece of 1/4-20 threaded rod, would be even better.

Copyright © 2024 Robert Penoyer

Thread one 1/4-20 nut about an inch up the threads on a 5" 1/4-20 bolt.

Thread a second nut up the threads and tighten it against the first nut.

Install Threaded Inserts into the Bottom Truss

Locate the Bottom Truss, the one with the 25/64" holes drilled into it.

Drive Threaded Inserts into the Legs of the Bottom Truss

Clamp the Bottom Truss flat onto a flat surface such that both legs are clamped flat against the surface with the triangular sections of the Legs extending past the edge of the flat surface.

> **NOTE: The following assumes that you have an impact driver. If you don't, driving with hand tools will be necessary.**

Screw a threaded insert onto the device. The slots in the insert should be finger tightened against the nut as shown in Figure 19.

Figure 19. Ready to Be Inserted

Using an impact driver with a 7/16" socket and a socket adapter, place the bolt into the socket and press the threaded insert firmly against one of the holes in the Truss. Firmly drive the insert into the Truss while keeping the bolt perpendicular to the surface of the Leg. Ensure that the end of the insert is driven past the surface of the wood.

Drive the bolt counterclockwise to remove it from the insert. The slot in the insert should be visible. (Having the slot accessible provides a means to remove the insert with a screwdriver if that should become necessary.)

Repeat this process for the other 3 holes in the Bottom Truss.

Both Trusses are now ready for sanding and a finish.

Copyright © 2024 Robert Penoyer

Apply Finish to All the Components

It's best to apply finish to all the components before they are assembled. This is particularly true if the Trusses are to receive a different finish than the Top and Bottom.

Sanding

Go over the Top, Bottom, and both Trusses with at least 120-grit paper to ensure all surfaces are smooth and all corners are slightly softened.

Decide on Stain or Paint

Hard Maple

The Table illustrated in these Instructions was built using hard maple. Hard maple tends to blotch when stained, so a dark brown paint was used to finish the Top and Bottom. Specifically, Rust-Oleum Satin Dark Walnut was used as shown in Figure 20.

Figure 20. Rust-Oleum Satin Dark Walnut

White Oak or Red Oak

White oak and red oak stain well, so you might choose to use stain if you've built your Table out of this species of wood.

Copyright © 2024 Robert Penoyer

Applying the Finish

Keep Some Areas Free of Finish

When applying a finish to the Top, leave a small area around the dowel holes unfinished to permit glue to adhere to this area. Keep the holes free of finish, also.

Similarly, when applying finish to the Top Truss, don't apply any to the surface of the Legs that will contact the Top so that glue will adhere to this area as well. Here, too, keep the holes free of finish.

Stain or Paint the Top and Bottom

Apply at least two coats of paint to the Top and Bottom if your choice is to use paint.

Use your own discretion as to how to finish the Top and Bottom if your choice is to use stain.

One More Finishing Step

A clear finish will help to protect the Top since it will probably have objects place on it. Whether you use paint or stain, apply two coats of Helmsman Spar Urethane in Clear Satin to the top of the Top. See Figure 21.

Copyright © 2024 Robert Penoyer

Figure 21. Helmsman Spar Urethane in Clear Satin

You will probably want to put a clear finish on any stained surface. The product in Figure 21 is a good choice.

Finish the Trusses

The Trusses in the Table illustrated in these Instructions received a finish first of Zinsser SealCoat 100% wax-free shellac which gave them a slightly amber tint. That finish is not necessarily recommended.

If you'd like a clear, unstained, unpainted finish on the Trusses, the product in Figure 21 is a good choice.

Let the Finish Cure

Whatever finish you choose, allow enough time for it to fully cure before handling the components. At least 24 to 72 hours is recommended.

Copyright © 2024 Robert Penoyer

Assemble the Table

Assembling the Table can be a challenge. The chains make the assembly process particularly difficult. The assembly can be accomplished by one person, but a second pair of hands would be very helpful.

Dry Fit the Top Truss to the Top

Gather the Top, the Top Truss, and four 7/16"x 2 1/2" dowels.

> **NOTE: As noted on Page 7, dowel pins should not be smooth-sided. They should be scored on the sides to permit air and glue to escape as the dowels are pressed into place. Using smooth-sided dowels can make assembly extremely difficult because a smooth dowel coated with liquid glue will act like a piston being driven into a sealed cylinder so that completely inserting the dowel into its mating hole might become impossible. You can be stuck in a predicament with drying glue and a dowel not completely inserted.**

Try the fit of each of the dowels in each of the holes in both the Top and the Top Truss. The fit ideally will be just slightly snug but free enough to easily remove the dowels. If this condition isn't met, either increase the hole size using a 29/64" drill bit or sand the dowels to reduce their diameters until the fit is as described.

Extend the Dowel Holes as Needed

Fully insert the dowels into the Top. Be sure that they are fully seated against the bottom of each hole. Use a pencil to draw a line across each dowel where the dowel meets the surface of the Top.

Now move each dowel to the holes in the Top Truss so that the portion that was inside the Top is now sticking out from the Truss. Be sure they are fully seated in the holes.

You might see that the lines that you drew are now above the surface of the Legs. If that happens, it means that the holes in the Legs are too shallow for the dowels.

Copyright © 2024 Robert Penoyer

If the holes are too shallow, use a 7/16" bit to drill each hole in the Legs slightly deeper until the lines on the dowels are all about 1/16" past the surface of the Legs. You are ready to proceed once this is done.

Put a dowel into every hole in the Truss and then connect the Truss to the Top. Be sure to connect "A" with "A" and "B" with "B." If the Legs can rest fully against the Top, then you are ready to continue. If not, drill the holes in the Legs slightly deeper until the Legs sit fully against the Top.

Glue the Top Truss to the Top

Gather Titebond III glue and two clamps.

Be sure that the clamps you intend to use can reach in far enough to engage the Truss and can extend far enough to span the distance from the top of the Top to the end of the Top Truss.

Apply the Glue

You should spread glue on the dowels, in all the dowel holes, and on the flat surfaces of both the Top and the Legs of the Top Truss where they will be in contact. You will want to avoid applying too much glue so that glue cleanup is not a major problem.

With everything set up to proceed with the gluing, including "A" matched with "A" and "B" matched with "B," apply the glue as just described.

Clamp the Truss to the Top.

Allow the assembly to cure for at least two hours before removing the clamps. Remove any excess glue.

Prepare the Chains

The chain used in this project was purchase at Lowe's in February 2024. It's Item #1329456. As of this writing, the chain can be found at https://www.lowes.com/pd/Blue-Hawk-10-ft-Welded-Polished-Steel-Chain/1000834066
One package contains 10 feet of chain. This is more than enough for this project. This chain is described as "welded polished steel." In fact, it's stainless steel.

Copyright © 2024 Robert Penoyer

Chain Considerations

If you cannot buy this chain or choose not to use it, then be aware that any variation from the specified chain will affect the appearance and strength of the Table. It will also void any of the chain-related procedures outlined below such that YOU will have to determine the number of links to use.

The specified chain was chosen based on its appearance, the minimal size of its links, the ability of the links to pass over the diameter of the steel used in the eyebolts and screw eyes and, finally, its strength.

Strength is an important consideration. The center chain will have to withstand the sum of the forces on all the corner chains, plus the weight of the Top and Top Truss which, together, weigh about 13 pounds. So, if each corner chain is adjusted to a tension of, say, 20 pounds, the center chain will have to withstand a stress of about 4 x 20 + 13 = 93 pounds. Any chain you select must be able to withstand this stress with plenty of margin to avoid structural failure. The specified chain has a rated capacity of 500 pounds.

Cut the Chain

The following assumes the use of use of the chain specified on Pages 5 and 42.

The center chain should be cut to contain 8 links. This number was chosen so that the nominal height of the table would be 25".

Each of the 4 corner chains should be cut to contain 20 links.

Put the chains aside until needed.

Drive the Eye Screws into the Top

Here are two important facts to keep in mind:

1. Just as the type of chain and number of chain links can affect the build of the Table, the distance the screw eyes and eyebolts are driven into the Top and Trusses will also affect the build.

Copyright © 2024 Robert Penoyer

2. Because the number of links in each piece of chain is even, <u>the anchors at the ends of each piece of chain must be oriented at right angles to each other</u>. This will allow the chain to remain untwisted.

Look at the screw eye in Figure 22 and notice that it's embedded in the Top about as far as possible. Try to duplicate this distance when you drive the screw eyes into your Top.

Figure 22. A Screw eye embedded in the Top

Notice in Figure 22 that the screw eye is oriented such that the gap is toward the center of the Top and the eye is angled at 45° to each adjacent edge.

Install the screw eyes into the Top:

1. Place the Top on a soft surface to protect its finish
2. Be sure the holes are facing up
3. Drive in each screw eye so that it's driven in as far as shown in Figure 22
4. Turn the gap toward the center of the Top with the eye set at 45° to each adjacent edge

<u>Drive Screw Eyes into the Trusses</u>

Driving screw eyes into the Trusses is done differently than they were driven into the Top. Look at Figure 23.

Copyright © 2024 Robert Penoyer

Figure 23. Screw eyes embedded in the Trusses

Each is at a 45° angle to the Beam of its Truss. But these screw eyes are not driven into the Beam as far as the other screw eyes were driven into the Top. This is because the 8/4 material of the Top is significantly thicker than the 6/4 material of the Trusses.

The screw eyes cannot be driven too far into the Beams of the Trusses because to do so risks blowing out the other sides of the Beams. Be very careful driving in these screw eyes.

> **NOTE: The center chain, that is the chain between the Trusses, experiences the greatest strain of all the chains in the Table. So, while the screw eyes should not be driven in too far, they must be driven in as far as is reasonable so that the threads get as much "bite" into the wood as possible.**

Drive a screw eye into each Truss being careful to observe the cautions outlined above.

Attach the Rubber Feet to the Bottom

Place the Bottom on a soft surface to protect its finish. Be sure the bottom of the Bottom is facing up.

Refer to the *Bottom* page of the Design Drawing. In particular, refer to the *Bottom (Bottom View)* image and notice the eight 9/64" holes. These are the places where the feet will be installed.

Install 8 feet into the 8 indicated locations.

Copyright © 2024 Robert Penoyer

Putting it All Together

Now is the time when the magic happens. It is strongly suggested that you place all the pieces of the Table on a carpeted floor to prepare for assembly. This will ensure that you won't damage the finish as the parts are moved around.

Attach the Bottom Truss to the Bottom

Begin by placing the Top and Top Truss assembly on its side such that the Truss is oriented with one Leg up and the other Leg down.

> **NOTE: Soft material such as a towel should be wrapped around parts of the Trusses to protect their finish where they might otherwise contact and rub against each other during the assembly process.**

Carefully feed the Bottom Truss through the opening in the Top Truss.

Align "C" with "C" and "D" with "D" while using four 1/4-20x1-1/2" machine screws, four 1/4" flat washers, and four 1/4-20 nuts to attach the Bottom Truss to the Bottom. Of course, all hardware will be inside the counterbores.

Securely tighten the screws into the threaded inserts in the Legs of the Truss but do not overtighten them.

Install the Center Chain

With the Top and Bottom assemblies lying on their sides, place the 8-link piece of chain on each of the screw eyes in the Trusses.

Arrange the Top and Bottom assemblies so that there is a bit of tension on the chain. Be sure the screw eyes are oriented such that the chain is not twisted.

Copyright © 2024 Robert Penoyer

Install Two of the Corner Chains

As the Top and Bottom are lying on their sides, install the threads of two eyebolts into the top two holes of the Bottom. Place a 1/4" flat washer and a 1/4-20 nut onto each eyebolt. Thread the nuts on only a short distance.

String a 20-link chain from a screw eye on the Top to the corresponding eyebolt on the Bottom. String another 20-link chain between the other screw eye on the Top to the corresponding eyebolt on the Bottom.

You should now have the center chain strung between the Trusses and two corner chains strung between the top two corners of the Top and Bottom.

Note that the eyes of the eyebolts in the Bottom should be oriented perpendicular to the eyes of the screw eyes in the Top to keep the chain untwisted.

IT IS ADVISABLE TO GET HELP FROM A SECOND PERSON BEFORE PROCEEDING WITH THE FOLLOWING STEPS

Install the Other Two Corner Chains

Carefully tilt the entire assembly, raising the Bottom above the Top while keeping tension on all the chains. **This might be difficult, so be careful!**

With the Top lying on a flat surface and the Bottom held above it, the center chain should be helping to suspend the Bottom.

Keep tension on the chains. The corner chains might tend to fall off. Reconnect them if that happens.

Place the end link of a 20-link chain over an empty screw eye in the Top and pull the other end upward toward the Bottom. Hook an eyebolt over the link at the other end of the chain and insert the threads of the eyebolt into the corresponding hole in the Bottom. Place a 1/4" flat washer and a 1/4-20 nut over the threads of the eyebolt. Thread the nut on only a short distance.

Now it's necessary to keep all three corner chains from falling off. Reconnect them if that happens.

Copyright © 2024 Robert Penoyer

Place the end link of the last 20-link chain over the last empty screw eye in the Top and pull the other end upward toward the Bottom. Hook the last eyebolt over the link at the other end of the chain and insert the threads of the eyebolt into the corresponding hole in the Bottom. Place a 1/4" flat washer and a 1/4-20 nut over the threads of the eyebolt. Thread the nut on only a short distance.

Complete the Assembly

The hard part is almost over.

Gently tighten all the nuts in the Bottom using a 7/16 socket wrench socket. (A long socket is most helpful.) Gently finger tighten the nuts so that the corner chains can no longer fall off.

Begin tightening the nuts to stiffen the corner chains.

Some opposing concerns must be considered:

1. The corner chains should be relatively tight to make the Table stable
2. The center chain will be subjected to the total strain of all the corner chains
3. Don't risk structural failure that could result if the corner chains are overtightened enough to cause catastrophic failure of the Trusses or the screw eyes in the Trusses

Translation: Tighten the corner chains fairly snuggly but not too tight. Use your best judgment.

<u>Align the Chains</u>

Make sure that the chains are not twisted. Any twisting can be corrected by rotating the associated eyebolt in the Bottom.

<u>Use a Level</u>

As the Table is resting on the Top and the nuts in the Bottom are exposed, place a level on the Top. Note the bubble position and then move the level to the same position and orientation on the Bottom. Adjust the nuts to adjust the tensions while simultaneously moving the bubble to the same position it had when the level was on the Top.

Copyright © 2024 Robert Penoyer

Repeat the adjustments of the tensions and the nuts by putting the level into different positions and orientations on the Top and Bottom until the Top and Bottom are parallel, and the corner chains are tightened to your satisfaction.

All Done!

Turn the Table over and place it on its feet. You're done! Be sure to put the Table somewhere in your home where both visitors and you can see it and enjoy it.

Final Thought

You should understand that it's normal for a tensegrity table to be a bit wobbly or shaky. That's just the nature of a structure that depends on chains or cables alone.

It's probably not advisable to locate the table where it's likely to be used as a place where drinks or other liquids are frequently placed on it. They'll just slosh around and possibly spill.

Copyright © 2024 Robert Penoyer