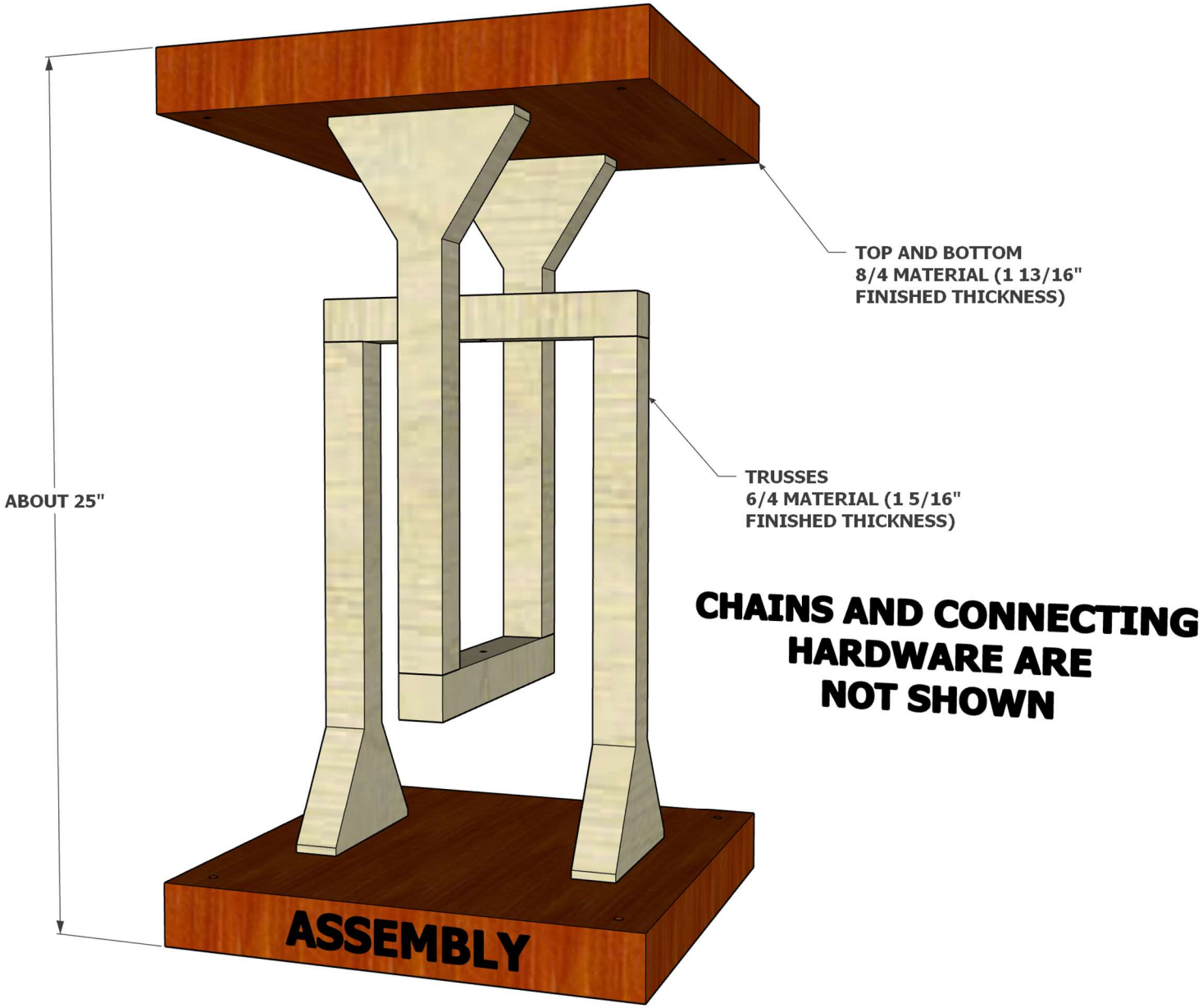
ABOUT 25"
TOP AND BOTTOM
8/4 MATERIAL (1 13/16"
FINISHED THICKNESS)
TRUSSES
6/4 MATERIAL (1 5/16"
FINISHED THICKNESS)
CHAINS AND CONNECTING
HARDWARE ARE
NOT SHOWN
ASSEMBLY

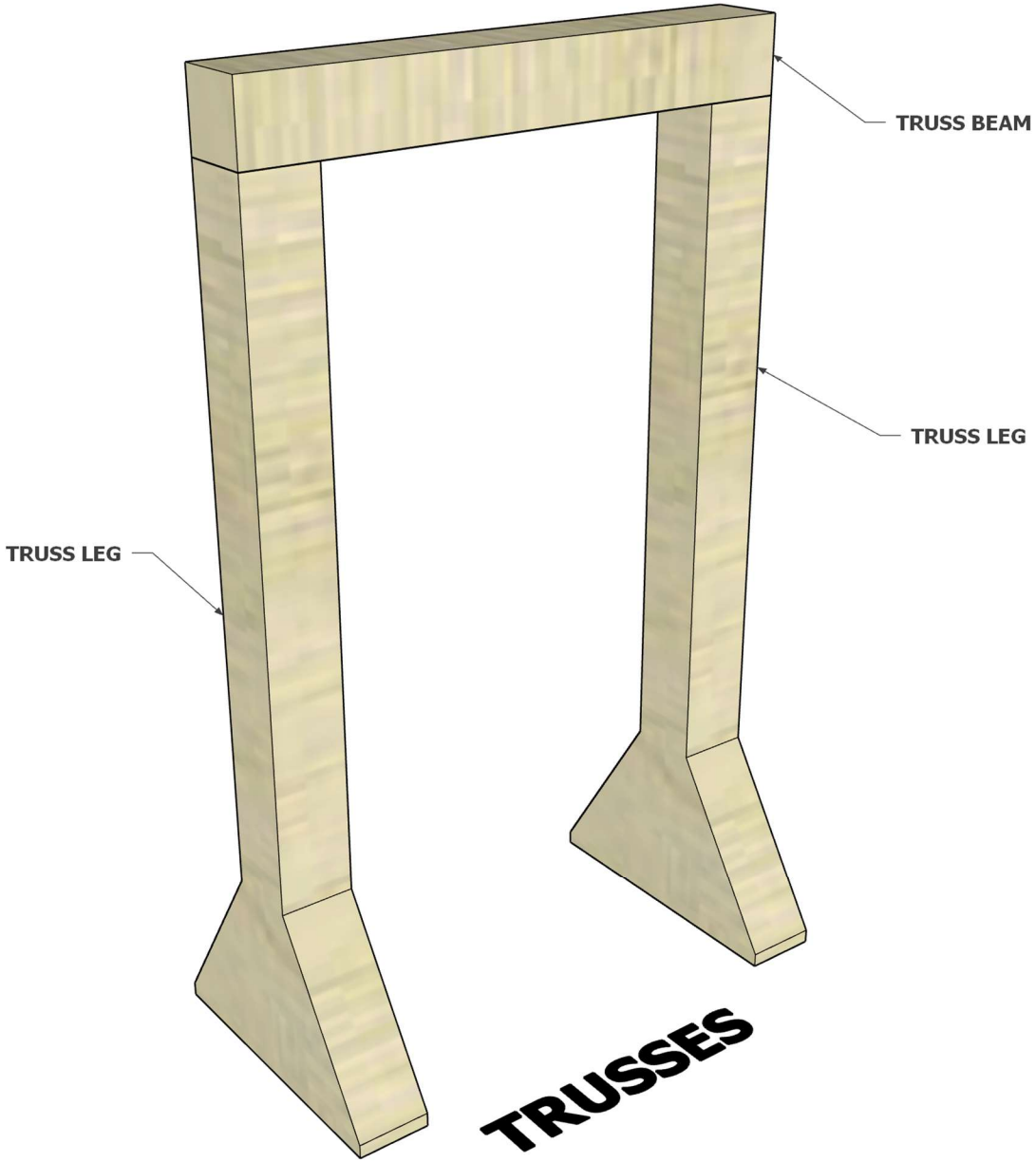

TRUSSES

LEGS AND BEAM

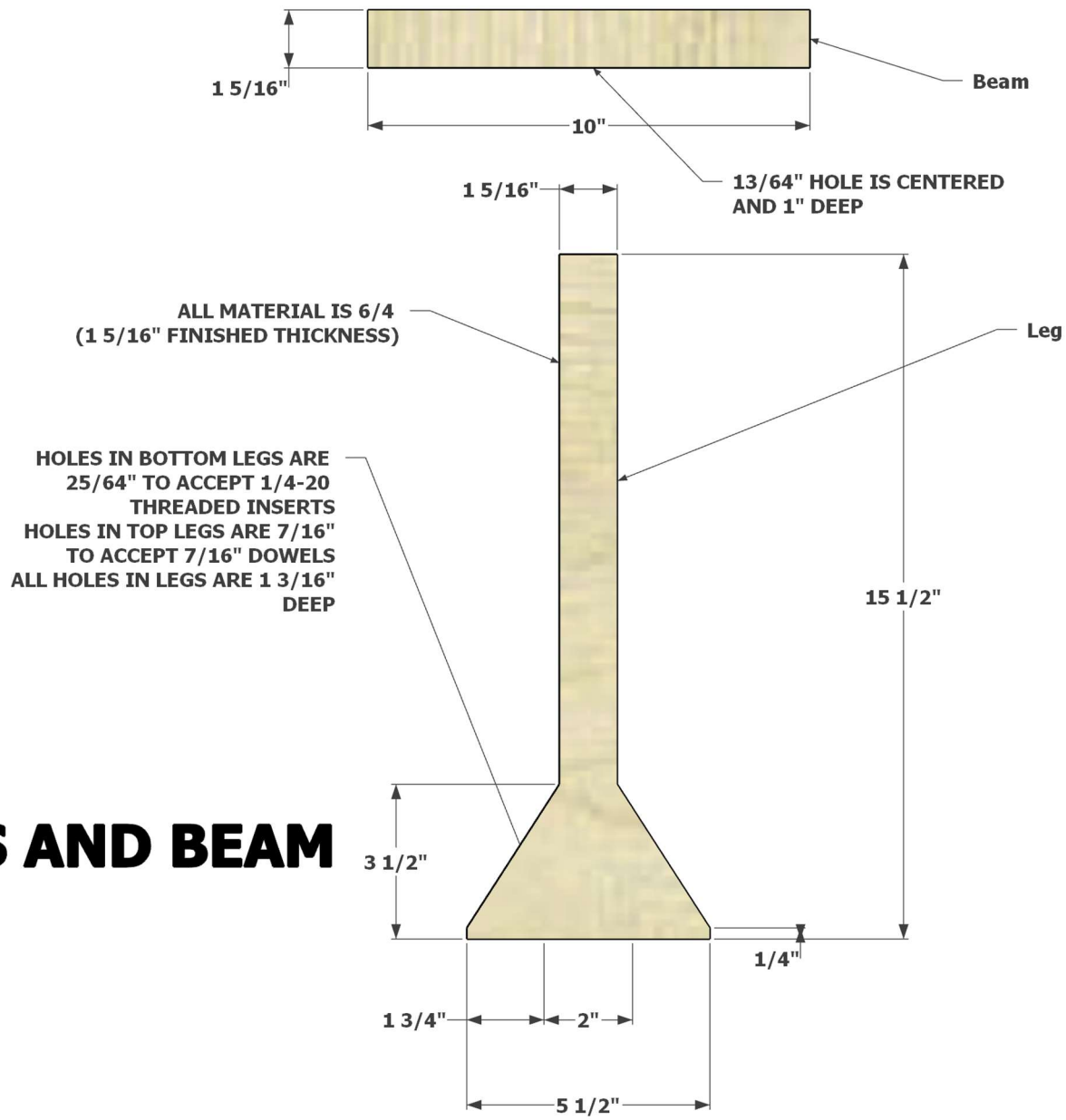

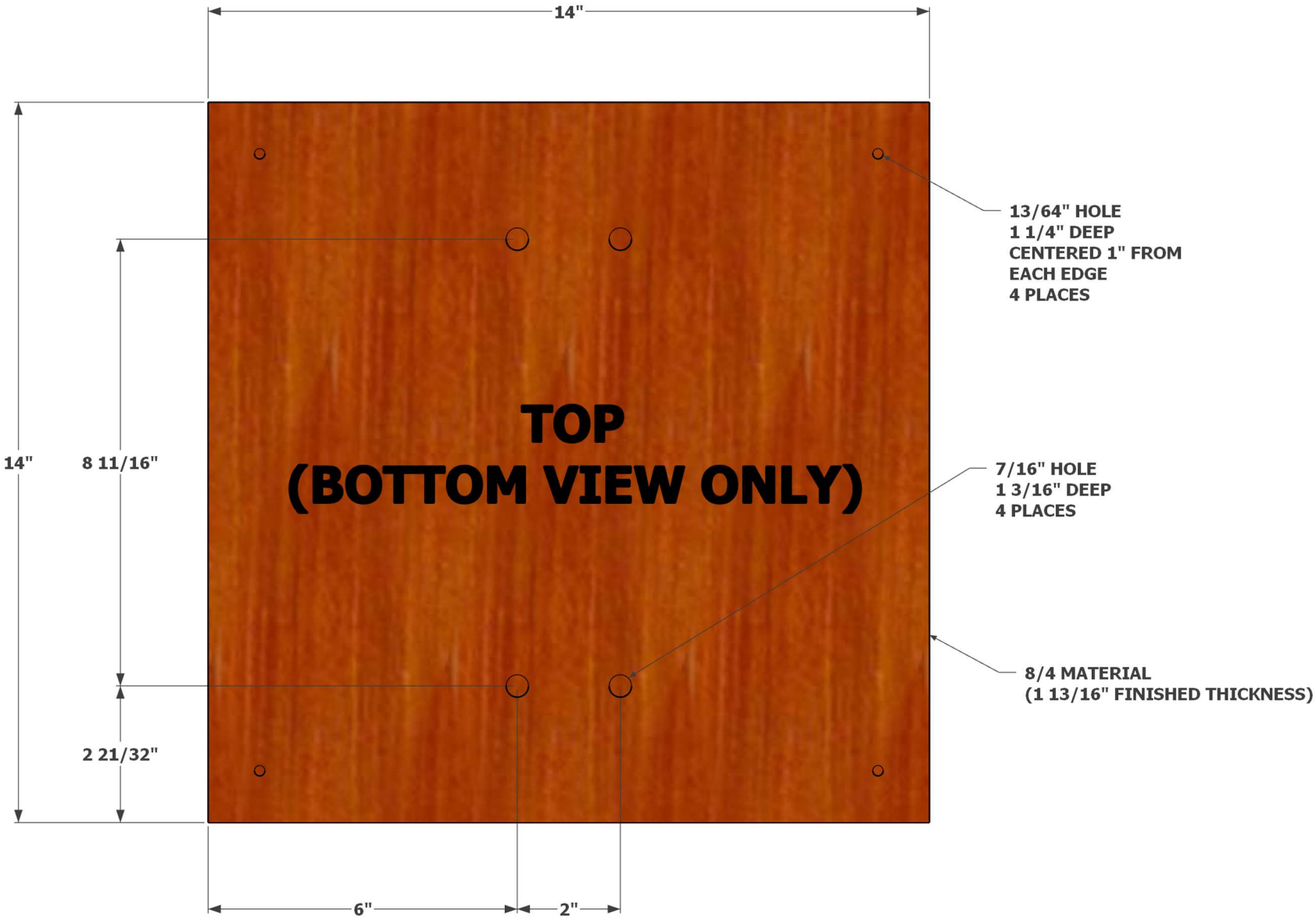
14"
14"
8 11/16"
2 21/32"
6"
2"
TOP
(BOTTOM VIEW ONLY)
13/64" HOLE
1 1/4" DEEP
CENTERED 1" FROM
EACH EDGE
4 PLACES
7/16" HOLE
1 3/16" DEEP
4 PLACES
8/4 MATERIAL
(1 13/16" FINISHED THICKNESS)

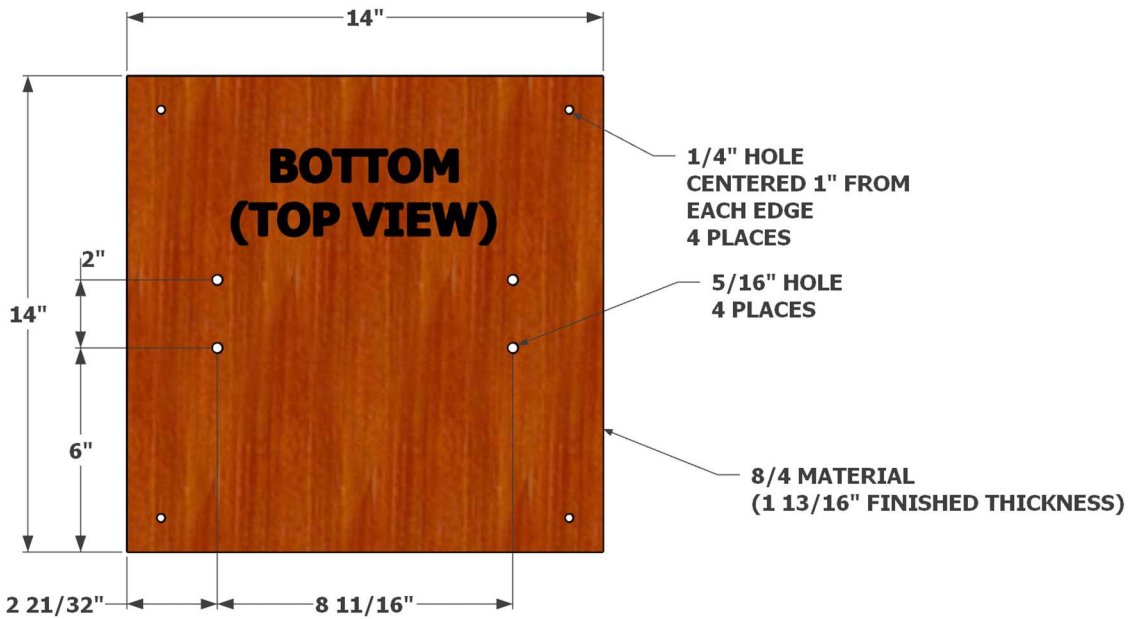
14"
BOTTOM
(TOP VIEW)
1/4" HOLE
CENTERED 1" FROM
EACH EDGE
4 PLACES
2"
14"
5/16" HOLE
4 PLACES
6"
8/4 MATERIAL
(1 13/16" FINISHED THICKNESS)
2 21/32"
8 11/16"

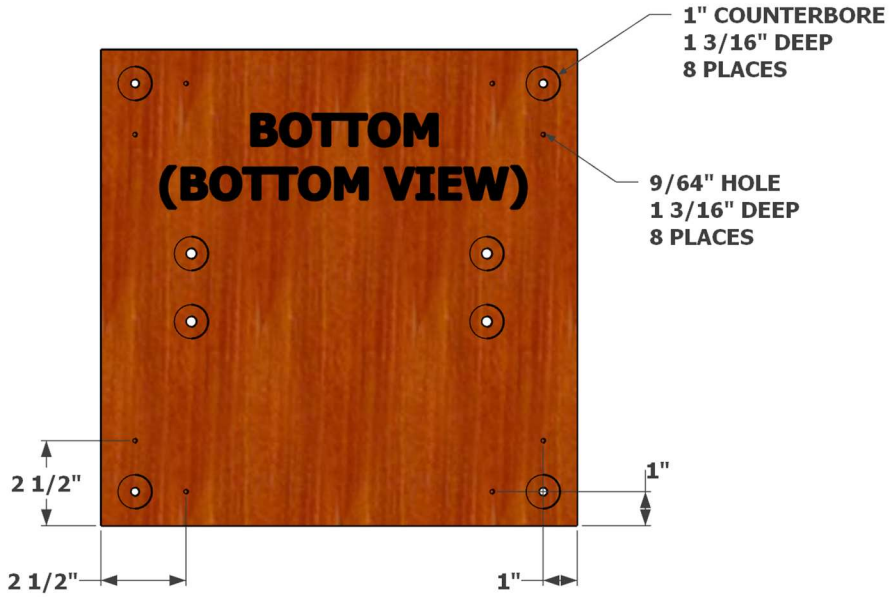
1" COUNTERBORE
1 3/16" DEEP
8 PLACES
BOTTOM
(BOTTOM VIEW)
9/64" HOLE
1 3/16" DEEP
8 PLACES
2 1/2"
1"
2 1/2"
1"

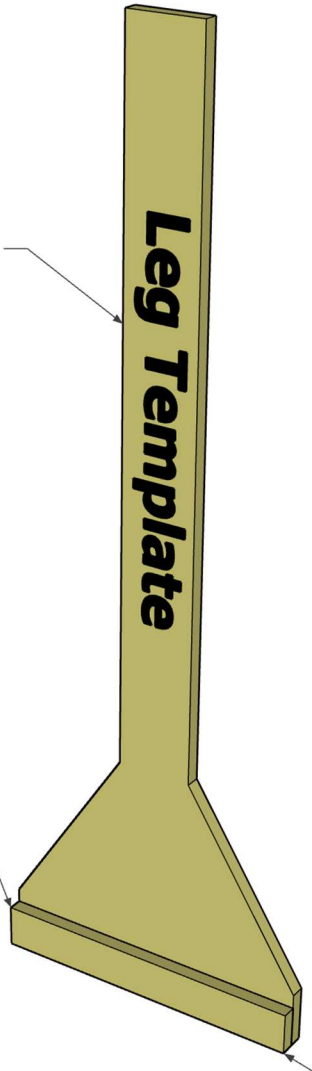

ALL MATERIAL IS
1/4" MDF

ALL DIMENSIONS ABOVE THE
CROSSBAR DUPLICATE THE
DIMENSIONS OF THE TRUSS
LEGS

Template Crossbar
GLUED INTO PLACE
BOTTOM EDGES ARE
FLUSH

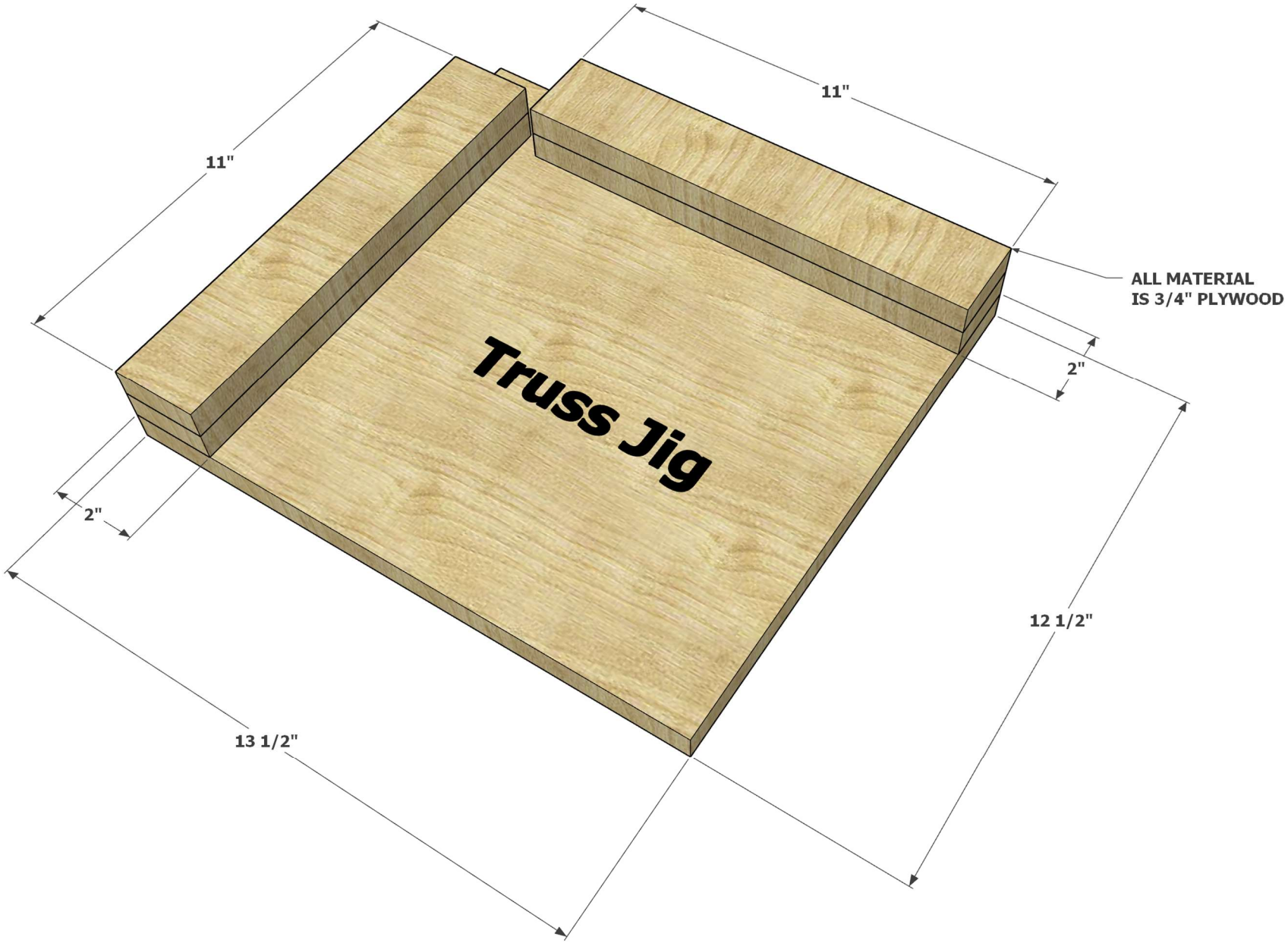
Truss Jig
11"
11"
ALL MATERIAL
IS 3/4" PLYWOOD
2"
2"
12 1/2"
13 1/2"