A Few Remarks about the Elevated Planter Box

Robert Penoyer

Copyright © 2018

A WARNING – PLEASE READ

Woodworking can be dangerous! It's up to you to determine if you can safely use the tools and perform the tasks needed to complete this and any other woodworking project. If you are unsure, STOP! Get advice from someone knowledgeable or do some careful studying on your own. Be safe!

Always wear at least an appropriate N95 dust mask or respirator when sanding or spraying paint. For advice about dust masks and respirators, visit this link:
https://woodworkingtoolkit.com/best-dust-masks-respirators/

READ, UNDERSTAND, AND FOLLOW ALL OF THE INSTRUCTIONS AND WARNINGS THAT CAME WITH YOUR TOOLS. BE CAREFUL!

This Is Not Standard Documentation – Fill In the Blanks

I generated the original material in this ZIP package just for me, not for a general audience. This gave me the freedom to create a minimal amount of written design documentation. And it allowed the documentation to be technically incomplete. I simply carried some ideas around in my head.

Please be aware that I might not have included every detail that you need to build this project. So I suggest that if you want to build it, carefully look things over and determine ahead of time if you have enough information to go forward.

It might be sufficient to simply guess at any needed information if you can't find it in the included files. For example, the dimension of the chamfers on the battens is not specified. It's not critical, so you should use your best judgment.

Please be aware that there might be mistakes in the documentation that I accounted for during the build but failed to note in the documentation.

Non-standard Dimensioning

My attitude toward dimensioning is to make it "good enough." Professional mechanical designers follow certain conventions regarding dimensioning. I'm not that careful. So understand this ahead of time when you find any dimensioning that is unconventional.

The Elevated Planter Box

The planter box is a utilitarian item of a quality suitable for display in an outdoor location. It was inspired by an item called Gronomics Elevated Garden Bed that appeared in a Costco flier dated February 23 – March 15, 2015, called Spring Savings catalog. The price of the item was "$149.99 Delivered After $30 OFF". That one was made from "Western red cedar with rustic finish." It was Item #944195. (In fact, the item is still available from Costco (as of 9 May 2018) as Item #944175 for $189.99: https://www.costco.com/Gronomics-Rustic-Elevated-Garden-Bed.product.100140667.html.)

The planter box described here is, in my humble opinion, nicer than the Costco item. And, by building yourself, you can have the pride of seeing your work on display and put to good use.

- Dimensions to the outside of the caps: 29" high by 36" long by 17" wide, approximately
- Dimensions of the inside of the box: 9" deep by 32" long by 13" wide, approximately
- Side rail, end rail, leg, and cap material: redwood
- Slat material: cedar
- Finish: none
- Glue: Tite Bond III or equivalent waterproof glue
- Screws: Stainless or exterior rated
- Nails: Stainless finish nails, 3d

A SketchUp File and an Equivalent PDF File

File *Elevated_Planter_Box_11.skp* is the SketchUp design for the box. This file is useful since I think all of the necessary details are incorporated here. So, for example, if you find a dimension or other detail missing, it can be determined by

examining this file. And, you can orbit and move the model around for a better look at everything.

File *Elevated_Planter_Box_11.pdf* contains all of the images and dimensions from the SketchUp file. Use this if you're not familiar with SketchUp.

Note that certain details are deliberately missing: the chamfer on the battens is not dimensioned; no countersinks are shown at the screw holes in the battens.

There are other missing data that can be inferred from the information in the SKP or PDF file. For example, in the drawings of the legs, the dimensions of the mortises are shown for one of the pieces but not the others. They're all the same, so it would be redundant to dimension the other pieces.

The Details

The information that follows will help to make clear the details of each component so that possible misunderstandings might be avoided. Each of the planter box's components will be discussed. Use the included SKP or PDF file to follow along with these descriptions.

3/4 View

Look at the 3/4 View page to see the overall nature of the box. All of the items in blue were made from redwood. The slats, shown in yellow, were made from cedar. You might choose to use different materials.

A distinctive cap sits on top of each leg.

The legs are formed from two pieces of 2x4 cut and joined to appear like a 4x4 leg. In fact, the assembled legs are 3" on each side. And, the legs are tapered.

The slats that form the box's bottom are spaced apart to allow for easy drainage of any plants that are contained in the box. This box was intended to hold large vases.

If you want to put soil directly in the box, you might want to line the box with landscape fabric or other suitable material that will allow for drainage but prevent the soil from falling through the gaps between the slats and the rails.

The slats are held in grooves cut into the bottom side rails and end rails.

Battens, the narrow vertical piece on the inside of each long side of the box, are used to link the rails together. This causes all three rails to bear the load instead of just the bottom rails. The battens are glued and screwed into place.

Each cap is held in place by a combination of glue and a screw. The screw is hidden in a counterbore and covered by a redwood plug.

Top View

Look at the Top View page. This shows the arrangement of all of the components that form the box.

Exploded View

Look at the Exploded View page. All of the individual wood parts are shown and identified.

No screws or nails are shown.

Note that all of the blue items are redwood and all of the yellow items are cedar. You can use whatever material you like, but the cedar slats are particularly resistant to rot and the redwood is reasonably resistant to rot.

Legs

Look at the Legs page. Each leg is formed using two pieces cut from a redwood 2x4. One 2x4 is trimmed so that the rounded edges are removed. Starting with a board that is 3 1/2" wide (the width of a normal 2x4), trim 1/4" from each side so that you are left with a board 3" wide with square edges.

The other piece of each leg is made by cutting a piece 1 1/2" wide with square edges. Notice in the drawing that the 1 1/2" by 1 1/2" pieces each have two 3/8"

counterbores 1" deep. Drill a 3/16" clearance hole centered in each counterbore for a screw that will secure the assembly. The screw should be stainless or exterior rated #10 and long enough to secure the two pieces together securely but not so long that it will penetrate through the opposite piece. Use glue to join the two pieces, with the screws adding extra strength.

Glue in a redwood plug to cover each counterbore.

The two pieces are glued and screwed together as shown in Figure 1. I'm calling this assembly Type 1. You will see why momentarily.

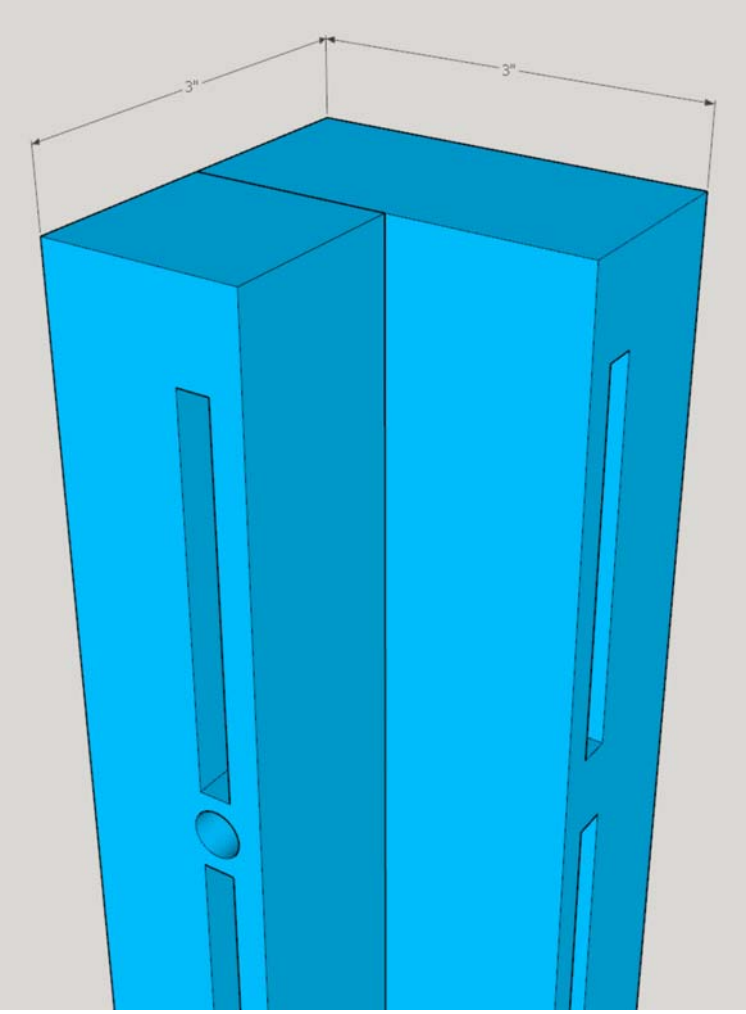

Figure 1. Leg Assembly, Type 1

The other type of leg assembly is one I'm calling Type 2. It's shown in Figure 2. It's glued and screwed similar to the Type 1 assembly in Figure 1.

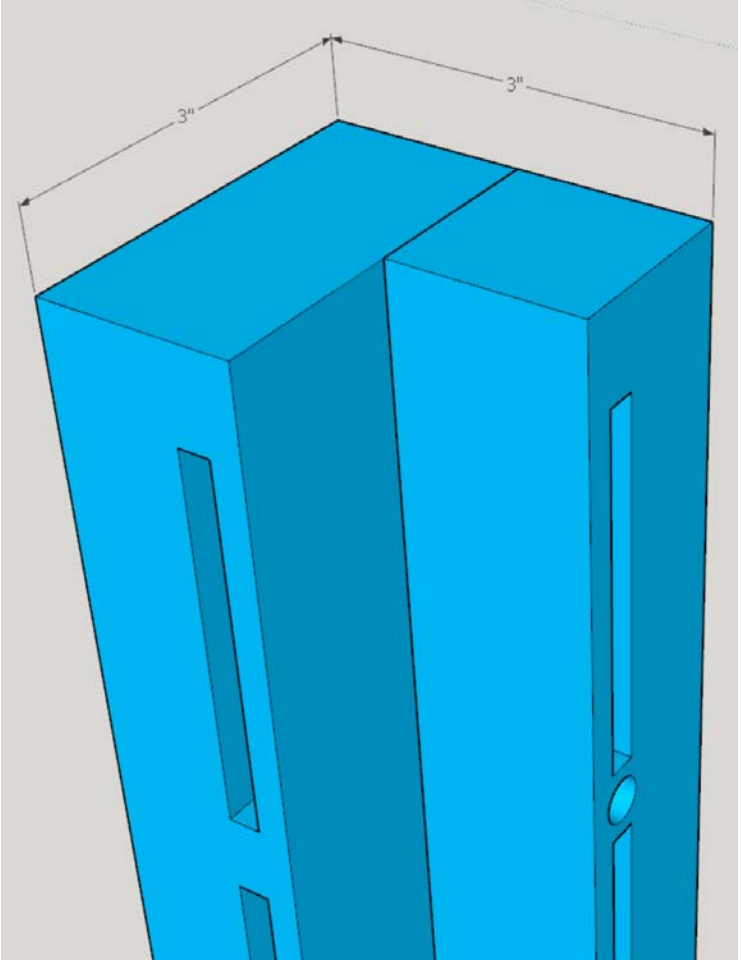

Figure 2. Leg Assembly, Type 2

The mortises in each leg assembly are off-center. The tenons of the side and end rails are also off-center. Locating the mortises closest to the inside of the box and leaving a wide area of the leg exposed outside of the box gives the illusion that the legs are cut from 3x3 stock instead of 2x4 material.

Both Type 1 and Type 2 leg assemblies are needed because the mortises are off-center. This is illustrated in Figure 3 where it's clear that the rails are not centered on the leg assemblies and that two different types of leg assemblies are required.

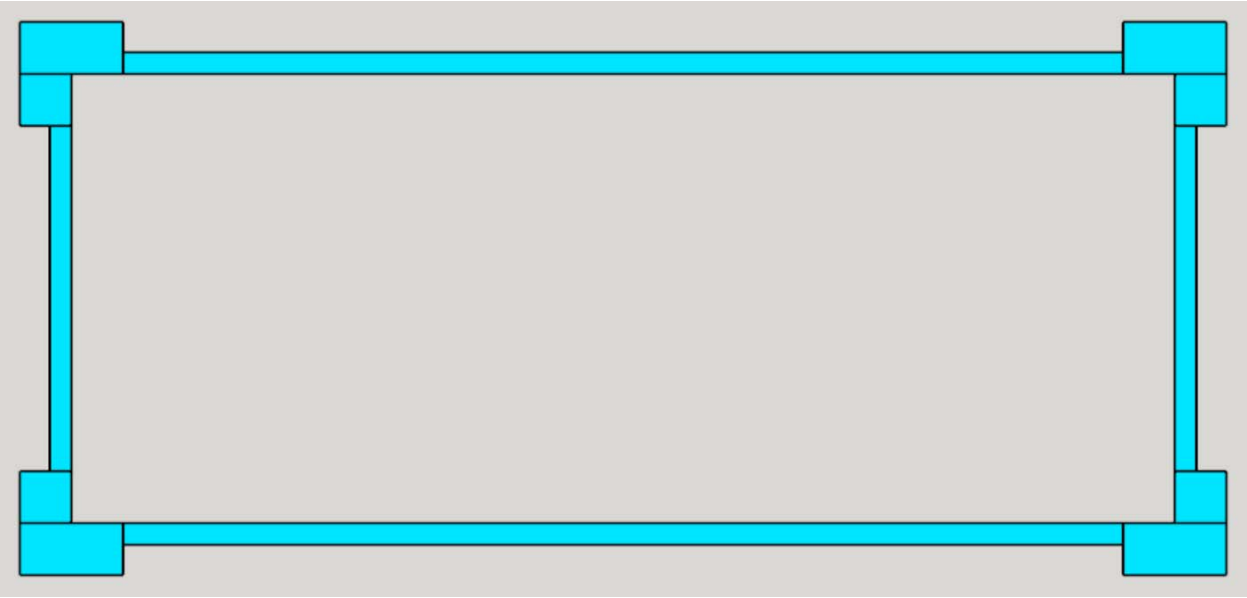

Figure 3. Off-center Rails Mounted in Leg Assemblies

Sides (Side Rails)

Look at the Sides (Side Rails) page. Only the Side Rail Bottom is shown in the SKP and PDF files. All of the side rails are identical except the Side Rail Bottom pieces contain a groove, as shown in the drawing. The slats will rest in this groove.

The tenons of the side rails are 15/16" long so they won't bottom out in the 1" deep mortises in the leg assemblies.

Care should be taken so that the main body of each side rail is 29" long and *identical* to all of the other side rails. Otherwise, the side rails won't join the legs cleanly, and your assembly will look sloppy.

The tenon of each side rail is glued into the mortise of each leg assembly. Be careful orienting the side rails as you insert them into the mortises in the legs. As shown in Figure 3, the inside of each side rail is flush with the inside of each leg.

Ends (End Rails)

All of the comments about the Sides (Side Rails) apply to the end rails.

Caps

Look at the Caps page. A cap is placed above each leg assembly to dress up the appearance of the planter box. A 3/8" counterbore 1" deep and a 3/16" clearance hole centered in the counterbore will accommodate a #10 screw. Be sure to glue each cap in place before adding the screw. Glue a redwood plug into each counterbore to clean up the appearance.

Because the caps will be glued to the end grain of each leg assembly, the glue joint on the end grain won't be as strong as if you were gluing long grain pieces. That's the reason for the screw through each cap. Be sure to make the screws long enough to get a strong bite in the end grain of each leg assembly.

You and others will probably pick up the planter box by holding onto the caps, so they must be attached securely to the legs.

A HINT: Make a little jig like the one shown in Figure 4. You can use this to center each cap on the top of each leg. Hold the insides of the jig against the top of a leg assembly and line up the cap so that its edges are even with the outsides of the jig. Since the arms of the jig are 1/2" wide, this will cause the 4" by 4" cap to be centered over the 3" by 3" leg. Easy!

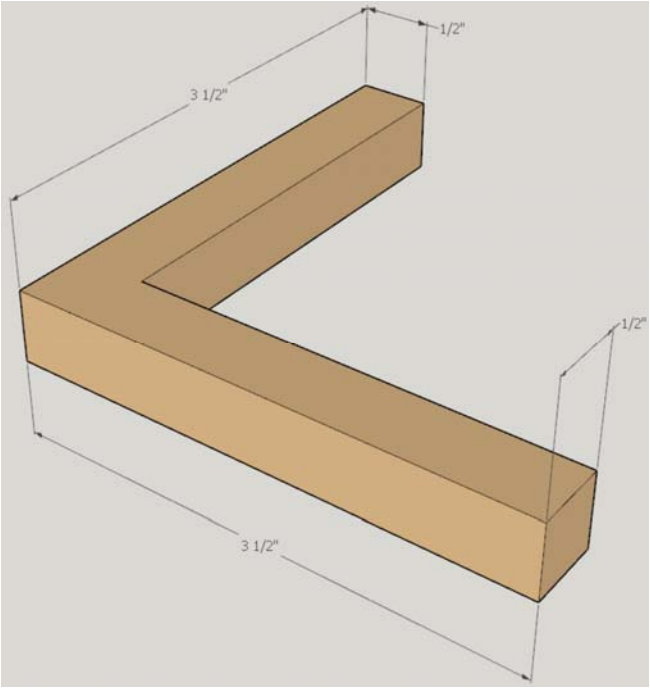

Figure 4. Jig for Centering the Caps on the Legs

Be sure when attaching the caps to the legs that the screw holes are set toward the outside corner of the leg. Otherwise, the screw will penetrate into a weak area of the leg or into nothing at all.

Slats

Look at the Slats page. The slats I used were rough-cut cedar. The appearance of the slats doesn't matter since they're located out of sight at the bottom of the box.

Also, the rough-cut slats were 13/16" thick. This accounts for the width of the grooves in the bottom end rails and side rails. If your slat material has a different thickness, be sure to cut the grooves to fit.

The slats fit into the grooves of the bottom rails as shown in Figure 5. Cutouts are provided in the corners of the end slats so that no grooves or dados are needed in the leg assemblies.

The slats are not glued into place. Nails are used, instead. See the next section for an explanation.

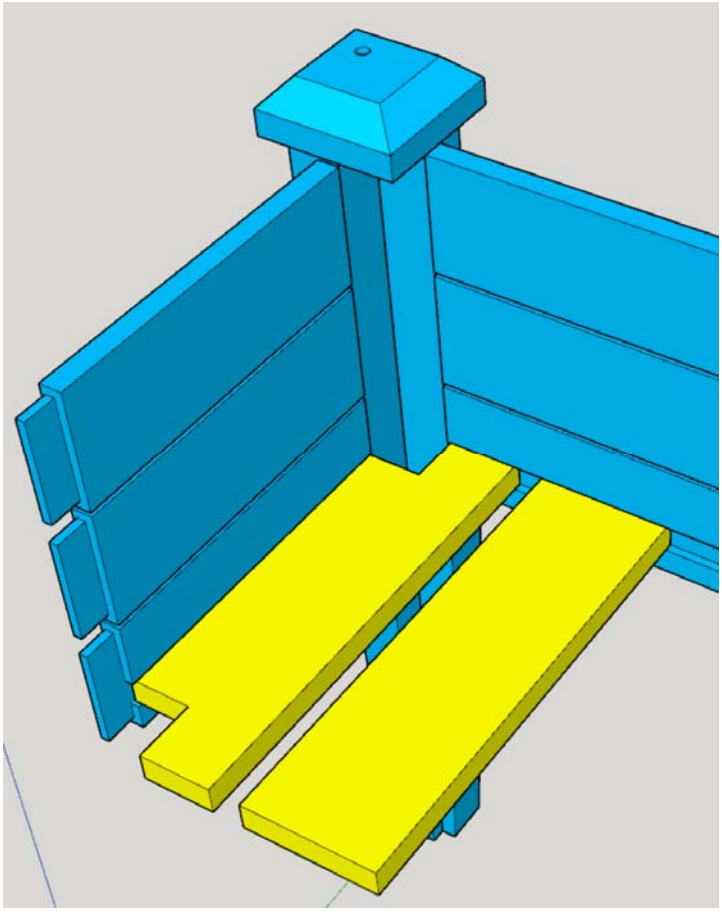

Figure 5. The Slats Fit into the Grooves

Nails

Because the slats rest in grooves that are only 1/4" deep, there is a real possibility that the side rails could bow outward. This would allow the slats to fall out of the grooves. Nails are used to prevent this possibility.

One 3d (3-penny) stainless steel finish nail is toed through each end of each slat and into the side rails as shown in Figure 6. This anchors the slats to the rails and prevents the rails from bowing outward.

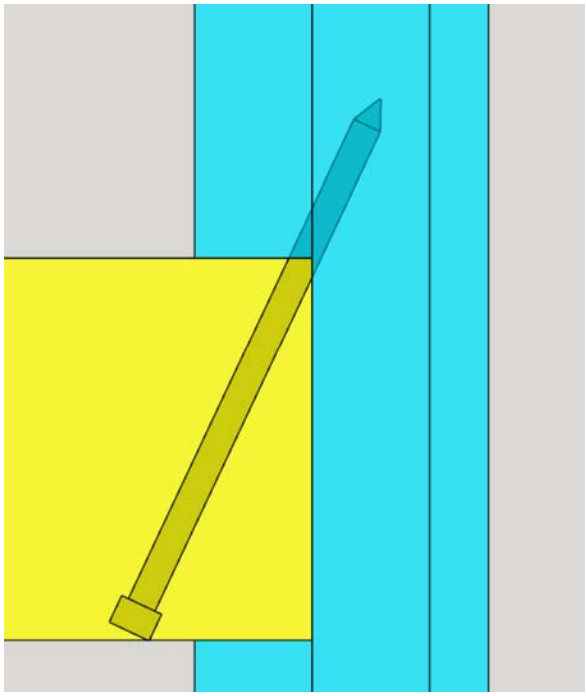

Figure 6. A 3d Stainless Steel Finish Nail Toed through the Bottom of End of Each Slat and into the Side Rail Anchors the Rails to the Slats

Battens

Look at the Battens page. As can be seen in the accompanying photographs, battens weren't used when the planter box was first built. This caused the bottom rails to support the entire load, thus allowing the rails to sag. So the battens were added after the initial build.

The battens tie the bottom rails to the two rails above so that all three rails carry the load. The battens are glued and screwed into place. No countersink is shown in the drawing but a countersink at each screw hole is necessary.

Use 1" #10 countersunk stainless or exterior rated screws in the battens.

The battens are chamfered on three sides. This and countersinking the screw heads helps to prevent scratches or other injuries when putting your hands into the box to manage the plants kept there. No chamfer is needed on the bottom end of the battens.

The chamfers on the battens are not dimensioned. Their dimension is not important, just as long as chamfers are used.

Screws

I don't remember what screws were used in the build so you're on your own with regard to the screw lengths. Use stainless steel or exterior rated screws. Use #8 or #10 pan head or round head screws, or equivalent, in all of the counterbores.

The battens are secured to the side rails using 1" #10 stainless or exterior rated countersunk screws. And the battens are also glued to the side rails.

The caps are secured to the tops of the legs using glue and screws. Because these screws are penetrating into end grain, the connection tends to be weaker than if they were penetrating into long grain. So use longer screws than you might otherwise think are needed.

Nails

The only nails used in the project anchor the slats to the bottom rails by toeing in from the bottom of the end of each slat and into the bottom rail as shown in Figure 6. Use 3d stainless finish nails. Be sure that no nails penetrate the side rails so that they're exposed on the outside of the box.

Glue

I used Tite Bond III because it's waterproof. The planter box will likely be used outside so this glue or its equivalent is a good choice. Beware that Tite Bond III cures dark, so watch out for squeeze-out so that you don't leave stains on your work.